BRAKES, REAR CALIPER - Z26NMY99A4/B4/A6/B6 (C750116)

2026 RZR - RZR XP S 4 1000 ULTIMATE (R01) - Z26NMY99A4/B4/A6/B6

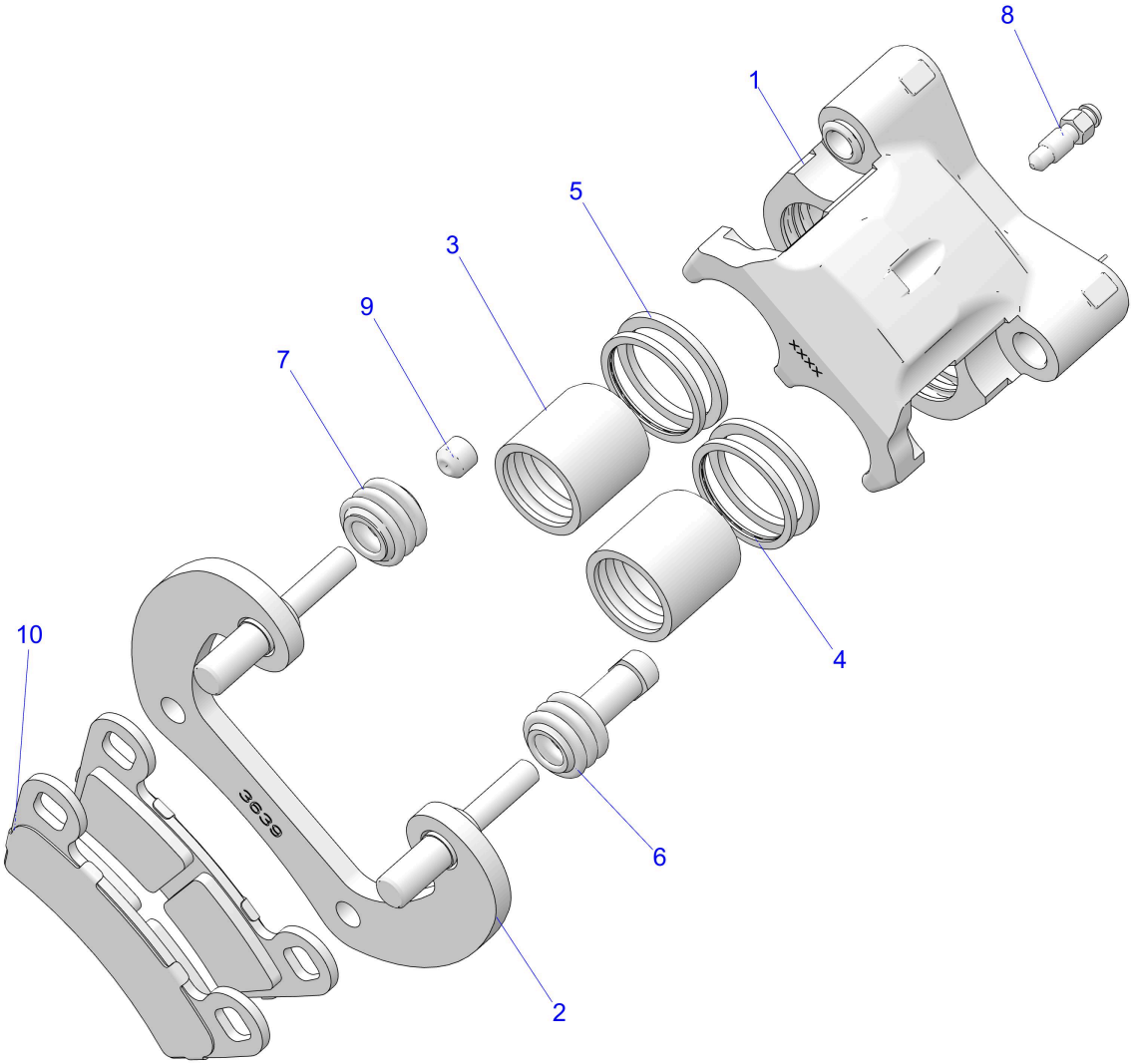

© 2023 Polaris Industries Inc.

C750116

Reference #	Part#	Description	Quantity
1	1913665	ASM-BRK-CAL-R-DB1-3/16-ALG [INCL. ALL]	1
1	1913664	ASM-BRK-CAL-L-DB1-3/16-ALG [INCL. ALL]	1
2	1913639	ASM-CAL MNT,1.5	1
3	5138832	PISTON-BRAKE,1.188",AL,GROOVED	2
4	5410779	SQUARE RING-MOLDED (.094)	2
5	5410780	SQUARE RING, MOLDED (.103 X .134)	2
6	5412505	BOOT-PIN BUSHING	1
7	5412506	BOOT-PIN SEAL	1
8	7081343	SCR-M7X1.0,BLEEDER,OLIVE D	1
9	7518863	SCR-M10X1.0X8,SOC SET-OD	1

10	2208936	K-BRAKE,HD,PAD,DB1" [OPTIONAL]	1
10	2211852	K-ASM,PAD,BRAKE [INCL. 2 PADS]	1

Copyright 1996-2026 Polaris Industries U.S.A All rights reserved.