BODY, REAR BUMPER - Z26NMY99A4/B4/A6/B6 (C0705025-13)

2026 RZR - RZR XP S 4 1000 ULTIMATE (R01) - Z26NMY99A4/B4/A6/B6

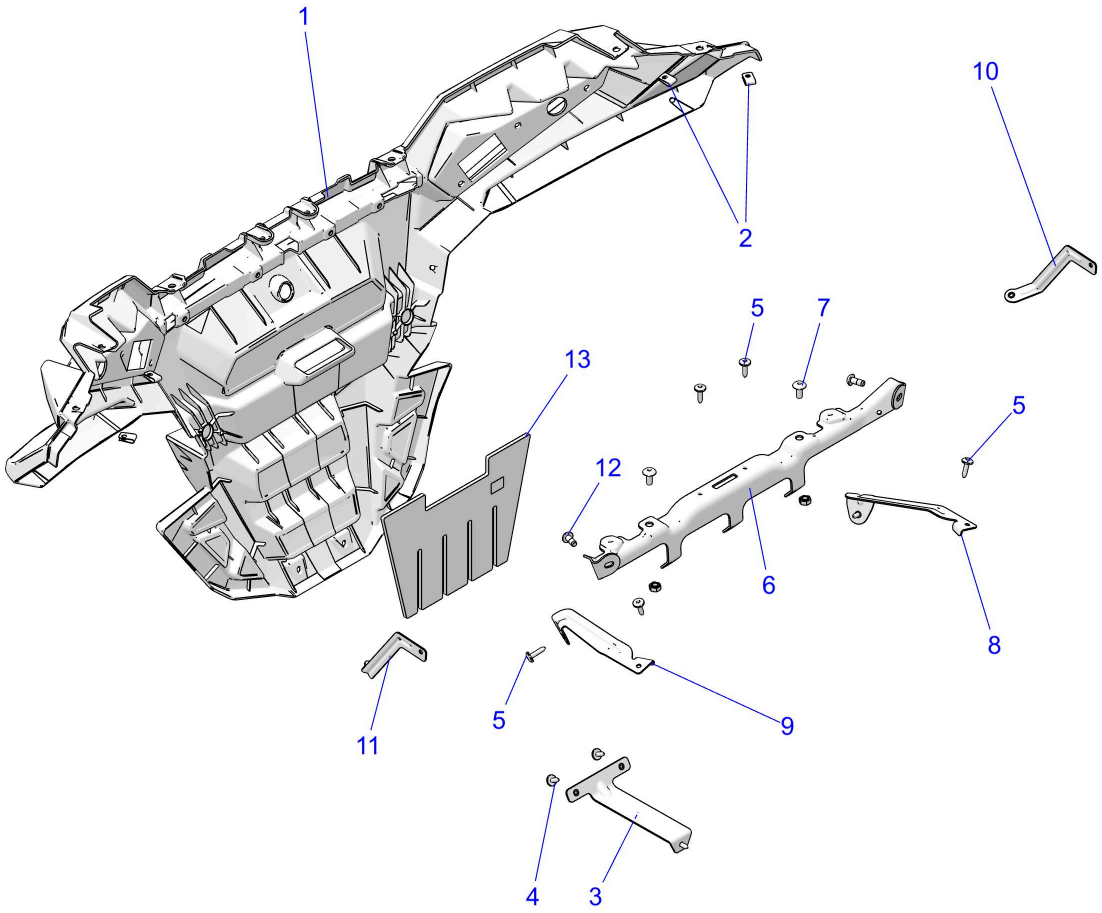

© 2023 Polaris Industries Inc.

C0705025-13

Reference #	*Part#*	*Description*	*Quantity*
1	2638281-070	ASM-REAR FASCIA,BLK [INCL. 2 & 13]	1
2	7547674	NUT-M6-1.0, U-TYPE (2.5-3.8)	AR
3	5269679-329	BRKT-REAR FASCIA,LWR,ECOAT	1
4	7518936	SCR-M6X1X16 TR/TX-M	3
5	7519650	SCR-TXTH-M6X1.0X25 ZFB	AR
6	5273135-329	BRKT-REAR FASCIA,SUPT,ECOAT	1
7	7528105	SCR-TXTH-M8X1.25X20 8.8 ZTB SP	2
8	5272082-329	BRKT-SPT, REAR FASCIA,LH,ECOAT	1
9	5272083-329	BRKT-SPT, REAR FASCIA,RH,ECOAT	1
10	5271998-329	BRKT-SPT,REAR FENDER,LH,BLK	1

11	5271999-329	BRKT-SPT,REAR FENDER,RH,BLK	1
12	7519997	SCR-TXTH-M8X1.25X20 8.8 ZB3 P3	2
13	5815458	SHIELD-HEAT,REAR-FASCIA	1

Copyright 1996-2026 Polaris Industries U.S.A All rights reserved.