POLARIS

BODY, REAR FENDERS AND BEZELS - Z26NMY99A4/B4/A6/B6 (C750817)

2026 RZR - RZR XP S 4 1000 ULTIMATE (R01) - Z26NMY99A4/B4/A6/B6

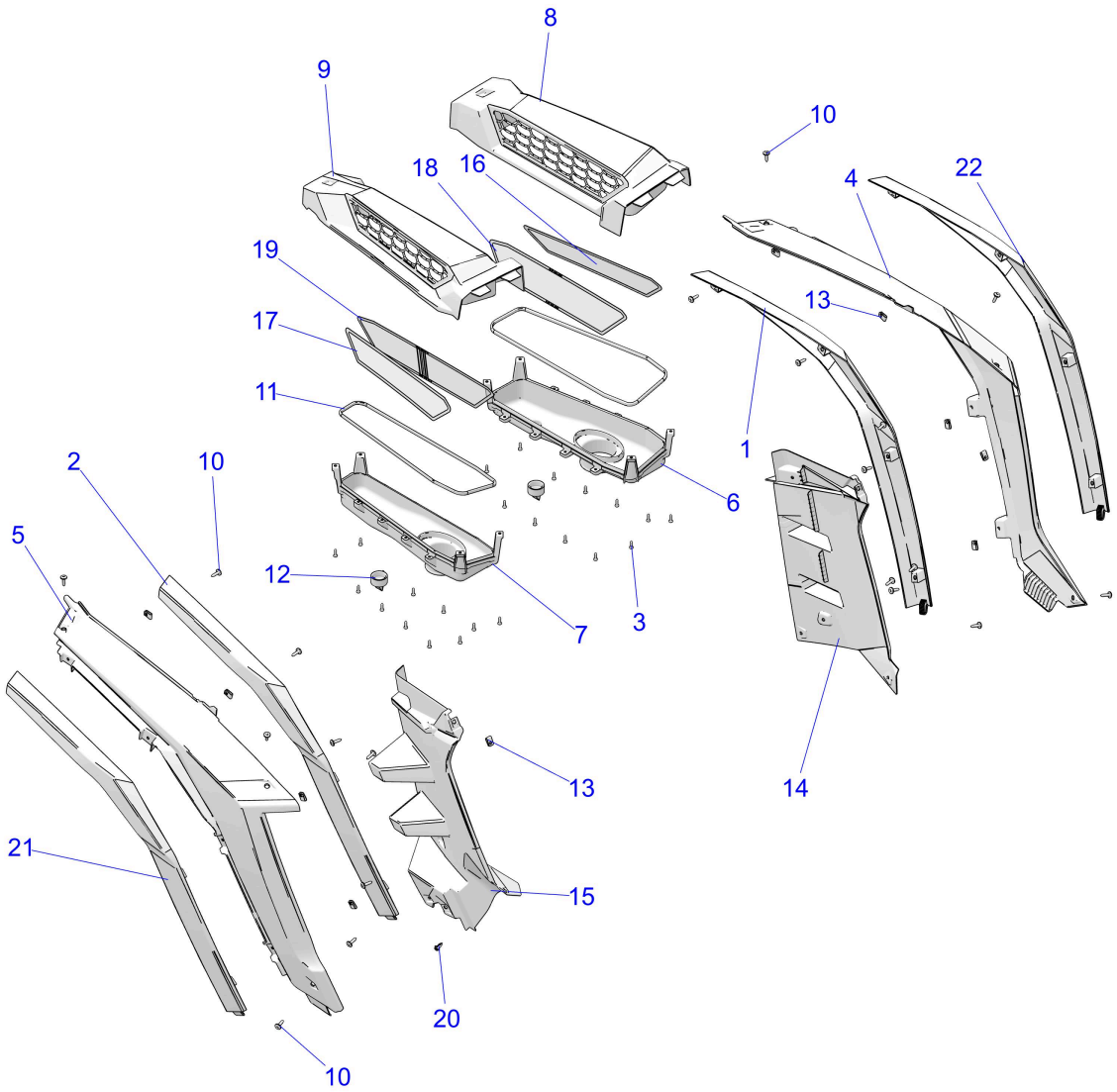

© 2024 Polaris Industries Inc. C750817

Reference #	*Part#*	*Description*	*Quantity*
1	5456537-070	FENDER FLAIR,RL OUTER,BLK	1
1	2638294-804	ASM-REAR FENDER,MIC,LH,STTH GR [A4/B4][STEALTH GRAY NON-METALLIC]	1
1	2638294-902	ASM-REAR FENDER,MIC,LH,SD DUNE [A6/B6][SAND DUNE NON-METALLIC]	1
2	5456538-070	FENDER FLAIR,RR,OUTER,BLK	1
2	2638295-804	ASM-REAR FENDER,MIC,RH,STTH GR [A4/B4][STEALTH GRAY NON-METALLIC]	1
2	2638295-902	ASM-REAR FENDER,MIC,RH,SD DUNE [A6/B6][SAND DUNE NON-METALLIC]	1
3	7512026	SCREW-#10X3/4-HI/LO-PN-T25,TRX-M	AR
4	5456533-804	FENDER-REAR,LH,MIC,STLTH GR [A4/B4][STEALTH GRAY NON-METALLIC]	1
4	5456533-902	FENDER-REAR,LH,MIC,SD DUNE [A6/B6][SAND DUNE NON-METALLIC]	1
5	5456534-804	FENDER-REAR,RH,MIC,STLTH GR [A4/B4][STEALTH GRAY NON-METALLIC]	1

5	5456534-902	FENDER-REAR,RH,MIC,SD DUNE [A6/B6][SAND DUNE NON-METALLIC]	1
6	5458010-070	BEZEL-INTAKE,BOTTOM,LH,BLK	1
7	5458012-070	BEZEL-INTAKE,BOTTOM,RH,BLK	1
8	5458011-070	BEZEL-INTAKE,TOP,LH,BLK	1
9	5458013-070	BEZEL-INTAKE,TOP,RH,BLK	1
10	7519650	SCR-TXTH-M6X1.0X25 ZFB	AR
11	5526342	SEAL INTAKE BEZEL	2
12	5417149	BOOT-PURGE VALVE,AIR BOX	2
13	7547674	NUT-M6-1.0, U-TYPE (2.5-3.8)	AR
14	5456521-070	FENDER,INNER REAR,LH,BLK	1
15	5456522-070	FENDER,INNER REAR,RH,BLK	1
16	5458014	SCREEN-INTAKE,OUTER,LH	1
17	5458016	SCREEN-INTAKE,OUTER,RH	1
18	5458015	SCREEN-INTAKE,INNER,LH	1
19	5458017	SCREEN-INTAKE,INNER,RH	1
20	7661855	RIVET-TUFLOK,.315-.325X.787	1
21	5456538-070	FENDER FLAIR,RR,OUTER,BLK	1
22	5456537-070	FENDER FLAIR,RL OUTER,BLK	1

Copyright 1996-2026 Polaris Industries U.S.A All rights reserved.