ENGINE, MOUNTING & LONG BLOCK - Z26NMY99A4/B4/A6/B6 (C0704748)

RZR - RZR XP S 4 1000 ULTIMATE (R01) - Z26NMY99A4/B4/A6/B6

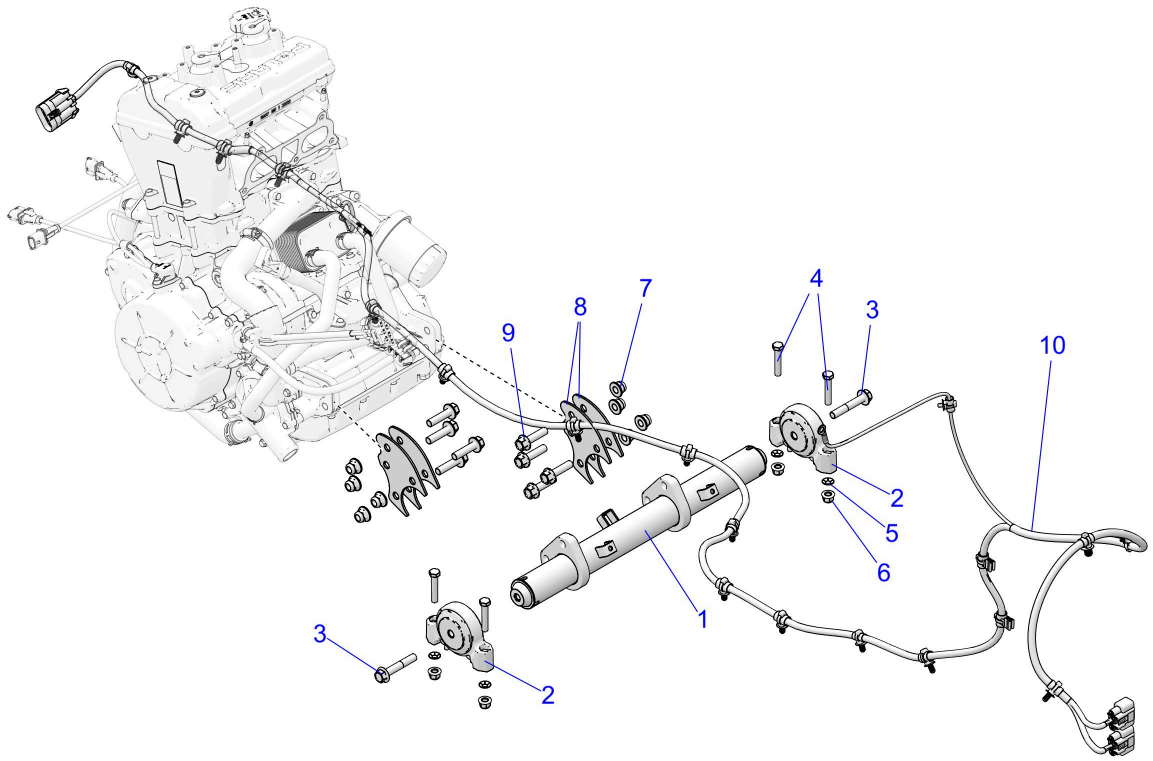

© 2021 Polaris Industries Inc. C0704748

Reference #	*Part#*	*Description*	*Quantity*
	2212961	K-LONG BLOCK 999MB	1
1	1027289-329	WELD-MOUNT,ENGINE,ECOAT	1
2	1332955	MOUNT-ISOLATOR,DRIVELINE	2
3	7521333-60	SCR-HXFL-M10X1.5X60 10.9 ZFB	2
4	7519097	SCREW-HH M8X1.25X45 8.8 ZOD	4
5	7547030	NUT-5/16-PAL-Y	4
6	7547332	NUT- M8X1.25, FLG, NYLOC-OLIVE D	4
7	7547333	NUT-HXFL M10X1.25 8 ZTB NYL	8
8	5257952	BRACKET, MOUNT, ENGINE	4
9	7519332	SCR-HXFL-M10X1.25X40 8.8 ZOD	8

10	2417886	HARN-900W,MP	1

Copyright 1996-2026 Polaris Industries U.S.A All rights reserved.