**DRIVE TRAIN, CLUTCH COVER AND DUCTING - Z26NMY99A4/B4/A6/B6 (C703366)**

**2026 RZR - RZR XP S 4 1000 ULTIMATE (R01) - Z26NMY99A4/B4/A6/B6**

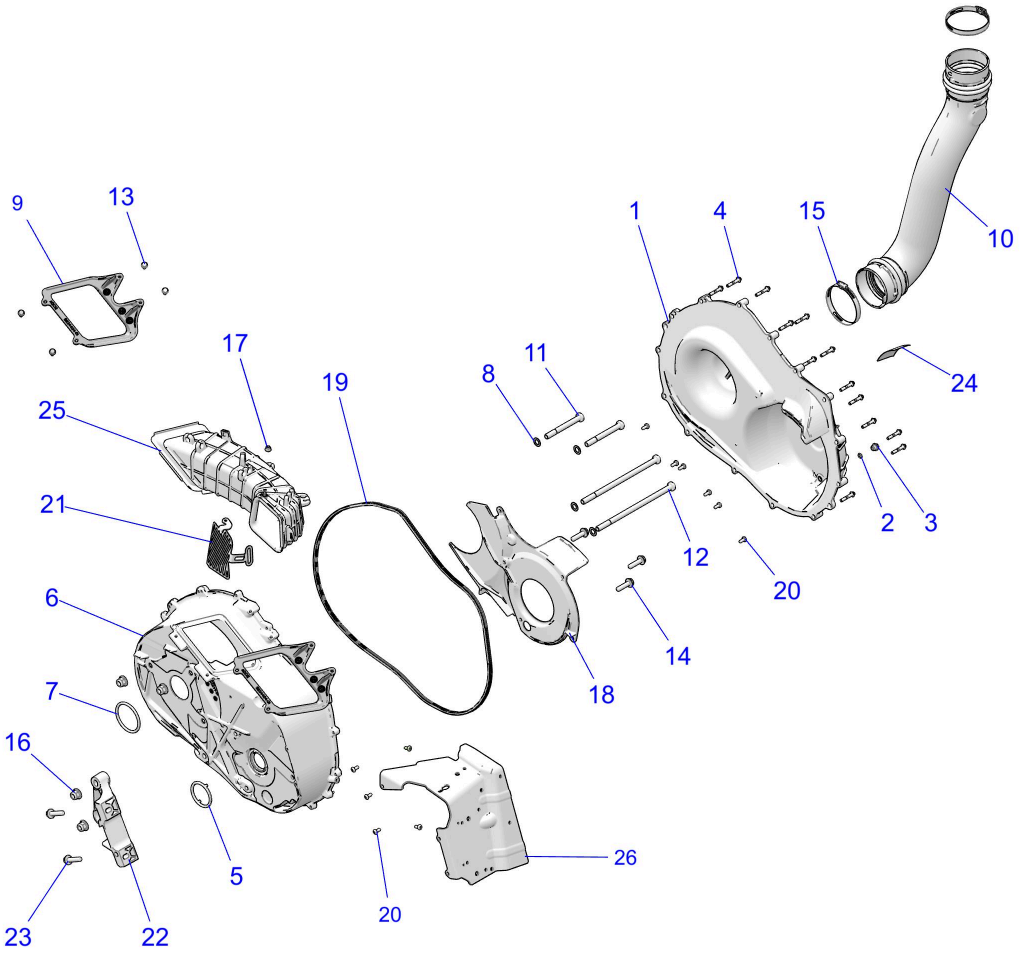


© 2023 Polaris Industries Inc. C703366

| *Reference #* | *Part#* | *Description* | *Quantity* |
|---|---|---|---|
| 1 | 2639856 | ASM-COVER,CLUTCH,OUTER [INCL. 2-4] | 1 |
| 2 | 5410542 | O RING-.364X.504X.07 | 1 |
| 3 | 5434264 | PLUG-DRAIN,CLUTCH COVER | 1 |
| 4 | 7521195 | SCR-HXFL-M6X2.0X38 SPC | 14 |
| 5 | 5417662 | O-RING-2.25X2.625X.21,NBR,BARB | 1 |
| 6 | 5144719 | COVER-CLUTCH,INNER,MACH | 1 |
| 7 | 5415647 | O-RING-0.489X0.629X0.070,EPDM | 1 |
| 8 | 7555919 | WASHER-.510X.840X.031 Y | 4 |
| 9 | 5634404 | MOUNT-OUTLET DUCT | 1 |
| 10 | 1244605 | ASM-DUCT,CVT,INLET | 1 |

| | | | |
|---|---|---|---|
| 11 | 7520945 | SCR-TXBH-M12X1.75X110 8.8 SPC | 2 |
| 12 | 7520946 | SCR-TXBH-M12X1.75X245 8.8 SPC | 2 |
| 13 | 7519342 | SCR-TFHFL-M6X1.0X25,ZOD | 4 |
| 14 | 7521294 | SCR-HHSEMS-M10X1.5X40 10.9 SPC | 3 |
| 15 | 7081969 | CLAMP-HOSE SLOTTED,92-100 DIA | 2 |
| 16 | 7547441 | NUT-HXFL M12X1.75 8 ZOD NYL | 4 |
| 17 | 7547339 | NUT-M6X1.0, FLG-NYLOC-OLIVE D | 1 |
| 18 | 5457973 | BAFFLE-INNER COVER | 1 |
| 19 | 5526344 | SEAL-CLTCH CVR,SILICONE FOAM | 1 |
| 20 | 7518656 | SCR-TXPH-M6X1.0X15 GR5 ZOD NYL | 11 |
| 21 | 1028036 | BRKT-SCREEN,BELT | 1 |
| 22 | 5144809 | BRKT-TRANSJOINT,MAG,MACH | 1 |
| 23 | 7518531 | SCR-HXFL-M10X1.5X1.5 8.8 ZY3 | 2 |
| 24 | 7177469 | DECAL-BELT,WARNING/CHECK | 1 |
| 25 | 5418437 | DUCT-CLUTCH,OUTLET | 1 |
| 26 | 5272000 | BRKT-GUARD,CLUTCH COVER | 1 |

Copyright 1996-2026 Polaris Industries U.S.A All rights reserved.