ENGINE, CYLINDER HEAD AND VALVES - Z26NMY99A4/B4/A6/B6 (C750579)

2026 RZR - RZR XP S 4 1000 ULTIMATE (R01) - Z26NMY99A4/B4/A6/B6

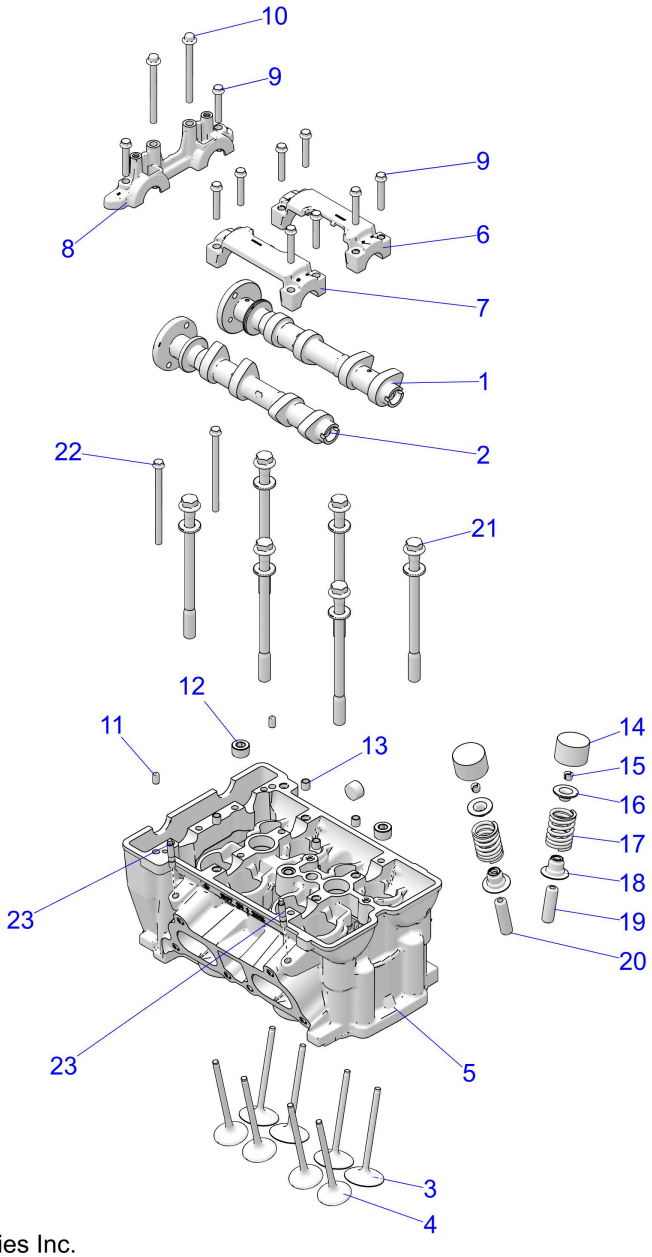

© 2024 Polaris Industries Inc. C750579

Reference #	*Part#*	*Description*	*Quantity*
	1209280	ASM-HEAD,COMPLETE [INCLUDES 1-20]	1
1	3024251	CAMSHAFT-INT	1
2	3024252	CAMSHAFT-EXH	1
3	3022134	VALVE-INTAKE,STEEL,G-90	4
4	3022883	VALVE, EXHAUST, INCONEL	4
5	3024448	ASM-CYLINDER,HEAD [INCL. 6-14]	1
6	-------	CAP-CAM,MACH,INT [INCL. IN CYLINDER HEAD ASM.]	1
7	-------	CAP-CAM,MACH,EXH [INCL. IN CYLINDER HEAD ASM.]	1
8	-------	CAP-CAM,MACH,FRONT [INCL. IN CYLINDER HEAD ASM.]	1
9	7520689	SCR-HXFL-M6X1.0X35 10.9 ZY3	10

10	7520688	SCR-HXFL M6X1.0X70 B18.2.3.4M	2
11	5137624	PIN-DOWEL,M6X10	2
12	7520284	PLUG-PIPE,M16,DIN	2
13	7662355	DWL-HOL,M8X8	4
14	5138477-440	TAPPET, VALVE, GRADED, 4.400	4
14	5138477-442	TAPPET, VALVE, GRADED, 4.425	10
14	5138477-445	TAPPET, VALVE, GRADED, 4.450	10
14	5138477-448	TAPPET, VALVE, GRADED, 4.475	2
14	5138477-450	TAPPET, VALVE, GRADED, 4.500	2
14	5138477-452	TAPPET, VALVE, GRADED, 4.525	4
14	5138477-455	TAPPET, VALVE, GRADED, 4.550	4
14	5138477-458	TAPPET, VALVE, GRADED, 4.575	8
14	5138477-460	TAPPET, VALVE, GRADED, 4.600	8
14	5138477-462	TAPPET, VALVE, GRADED, 4.625	AR
14	5138477-465	TAPPET, VALVE, GRADED, 4.650	AR
14	5138477-468	TAPPET, VALVE, GRADED, 4.675	AR
14	5138477-470	TAPPET, VALVE, GRADED, 4.700	AR
14	5138477-472	TAPPET, VALVE, GRADED, 4.725	AR
14	5138477-475	TAPPET, VALVE, GRADED, 4.750	AR
14	5138477-478	TAPPET, VALVE, GRADED, 4.775	AR
14	5138477-480	TAPPET, VALVE, GRADED, 4.800	AR
14	5138477-482	TAPPET, VALVE, GRADED, 4.825	AR
14	5138477-485	TAPPET, VALVE, GRADED, 4.850	AR
14	5138477-488	TAPPET, VALVE, GRADED, 4.875	AR
14	5138477-490	TAPPET, VALVE, GRADED, 4.900	AR
14	5138477-492	TAPPET, VALVE, GRADED, 4.925	AR
14	5138477-495	TAPPET, VALVE, GRADED, 4.950	AR
14	5138477-498	TAPPET, VALVE, GRADED, 4.975	AR
14	5138477-500	TAPPET, VALVE, GRADED, 5.000	AR
14	5138477-502	TAPPET, VALVE, GRADED, 5.025	AR
14	5138477-505	TAPPET, VALVE, GRADED, 5.050	AR
14	5138477-508	TAPPET, VALVE, GRADED, 5.075	AR
14	5138477-510	TAPPET, VALVE, GRADED, 5.100	AR
14	5138477-512	TAPPET, VALVE, GRADED, 5.125	AR
14	5138477-515	TAPPET, VALVE, GRADED, 5.150	AR
14	5138477-518	TAPPET, VALVE, GRADED, 5.175	AR
14	5138477-520	TAPPET, VALVE, GRADED, 5.200	AR
14	5138477-522	TAPPET, VALVE, GRADED, 5.225	AR
14	5138477-525	TAPPET, VALVE, GRADED, 5.250	AR
14	5138477-528	TAPPET, VALVE, GRADED, 5.275	AR
14	5138477-530	TAPPET, VALVE, GRADED, 5.300	AR
14	5138477-532	TAPPET, VALVE, GRADED, 5.325	AR
14	5138477-535	TAPPET, VALVE, GRADED, 5.350	AR
14	5138477-538	TAPPET, VALVE, GRADED, 5.375	AR
14	5138477-540	TAPPET, VALVE, GRADED, 5.400	AR
14	5138477-542	TAPPET, VALVE, GRADED, 5.425	AR
14	5138477-545	TAPPET, VALVE, GRADED, 5.450	AR
15	7081470	KEEPER-VALVE	AR
16	5138435	RETAINER,VALVE	AR
17	7045027	SPRING, VALVE	AR
18	3610212	SEAT-W/SEAL,VALVE SPRING	AR
19	-------	GUIDE-VALVE,PMF10,36MM	AR
20	-------	GUIDE-VALVE,EXHAUST	AR
21	7520978	SCR-HXFL,M11X1.25X150 10.9 SEM	AR

22	7519153	SCR-HXFLG,M6X1.0X90	AR
23	7528123	STUD-M6X1.0X32.5 8.8	2

Copyright 1996-2026 Polaris Industries U.S.A All rights reserved.