POLARIS

**CHASSIS, MAIN FRAME AND SKID PLATES - Z26NMY99A4/B4/A6/B6 (C750919)**

**2026 RZR - RZR XP S 4 1000 ULTIMATE (R01) - Z26NMY99A4/B4/A6/B6**

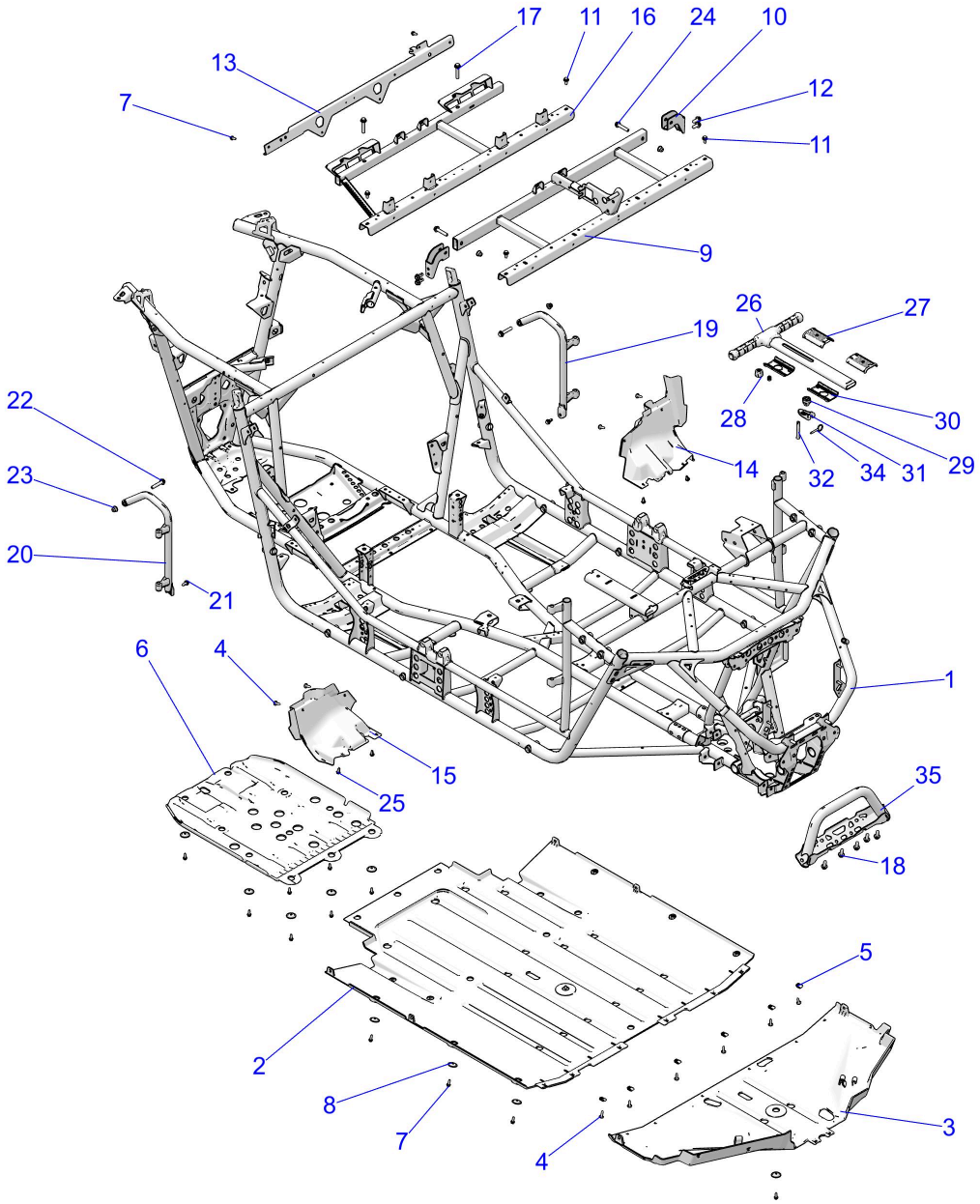


© 2025 Polaris Industries Inc.

C750919

| *Reference #* | *Part#* | *Description* | *Quantity* |
|---|---|---|---|
| 1 | 1028663-458 | WELD-FRAME MAIN,MP,72,BLK | 1 |
| 2 | 5466371-070 | SKID PLATE-MID,MP,BLK | 1 |
| 3 | 5466531-070 | PLATE-SKID,FRONT,MP,BLK | 1 |
| 4 | 7519650 | SCR-TXTH-M6X1.0X25 ZFB | 10 |
| 5 | 7547674 | NUT-M6-1.0, U-TYPE (2.5-3.8) | 6 |
| 6 | 5466296-070 | PLATE-SKID,REAR | 1 |
| 7 | 7518529 | SCR-M6X1.0X20,HXHD,FLG,TDFM,BK | 23 |
| 8 | 7556065 | WASHER-SKID PLATE | 24 |
| 9 | 1026957-329 | WELD-SEAT BASE,FRT,MP,BLK | 1 |
| 10 | 1026483-329 | BRKT-SEAT SUPPORT,FRT,MP,ECOAT | 2 |

| | | | |
|---|---|---|---|
| 11 | 7518555 | SCR-TFHFL-M8X1.25X20 CHS ZOD | 4 |
| 12 | 7518934 | SCR-M10X1.5X25-8.8 HFS ZOD | 4 |
| 13 | 5274852-329 | BRKT-CLOSE OFF SUPPORT,ECOAT | 1 |
| 14 | 5457593-070 | COVER-SCM,LH,BLK | 1 |
| 15 | 5457594-070 | COVER-TANK,RH,BLK | 1 |
| 16 | 1026958-329 | WELD-SEAT BASE,REAR,MP,BLK | 1 |
| 17 | 7518474 | SCR-HXFL-M10X1.5X55 8.8 ZY3 | 2 |
| 18 | 7519071 | SCR-M10X1.5X25 8.8 HXFL ZOD [TO 9.26.2025] | 6 |
| 18 | 7521333-20 | SCR-HXFL-M10X1.5X20 10.9 ZFB [FROM 9.26.2025] | 6 |
| 19 | 1026695-458 | WELD-BOLSTER,LH,REAR,BLK | 1 |
| 20 | 1026696-458 | WELD-BOLSTER,RH,REAR,BLK | 1 |
| 21 | 7518450 | BOLT-M8X1.25X20,HXHDFLG,W/PTCH | 2 |
| 22 | 7519956 | SCR-HXFL-M10X1.25X55 10.9 RIE | 2 |
| 23 | 7547333 | NUT-HXFL M10X1.25 8 ZTB NYL | 4 |
| 24 | 7519285 | SCR-HXFL-M10X1.25X55 10.9 ZOD | 2 |
| 25 | 7661855 | RIVET-TUFLOK,.315-.325X.787 | 4 |
| 26 | 2637771 | ASM-GRAB BAR | 1 |
| 27 | 5457427 | BUSHING-GRAB BAR,UPPER | 2 |
| 28 | 5457511 | NUT-GRAB BAR | 1 |
| 29 | 5457512 | CAP,GRAB BAR LEVER | 1 |
| 30 | 5457891 | BUSHING-GRAB BAR,LOWER | 2 |
| 31 | 5459039 | LEVER,GRAB BAR | 1 |
| 32 | 7521309 | ROD-GRAB BAR THREADED | 1 |
| 34 | 7663047 | PIN-GRAB BAR | 1 |
| 35 | 1028894-831 | WELD-FRT,BUMPER,SHDW BRONZE | 1 |

Copyright 1996-2026 Polaris Industries U.S.A All rights reserved.