BRAKES, FRONT CALIPER - Z26NMY99A4/B4/A6/B6 (C703376-1)

2026 RZR - RZR XP S 4 1000 ULTIMATE (R01) - Z26NMY99A4/B4/A6/B6

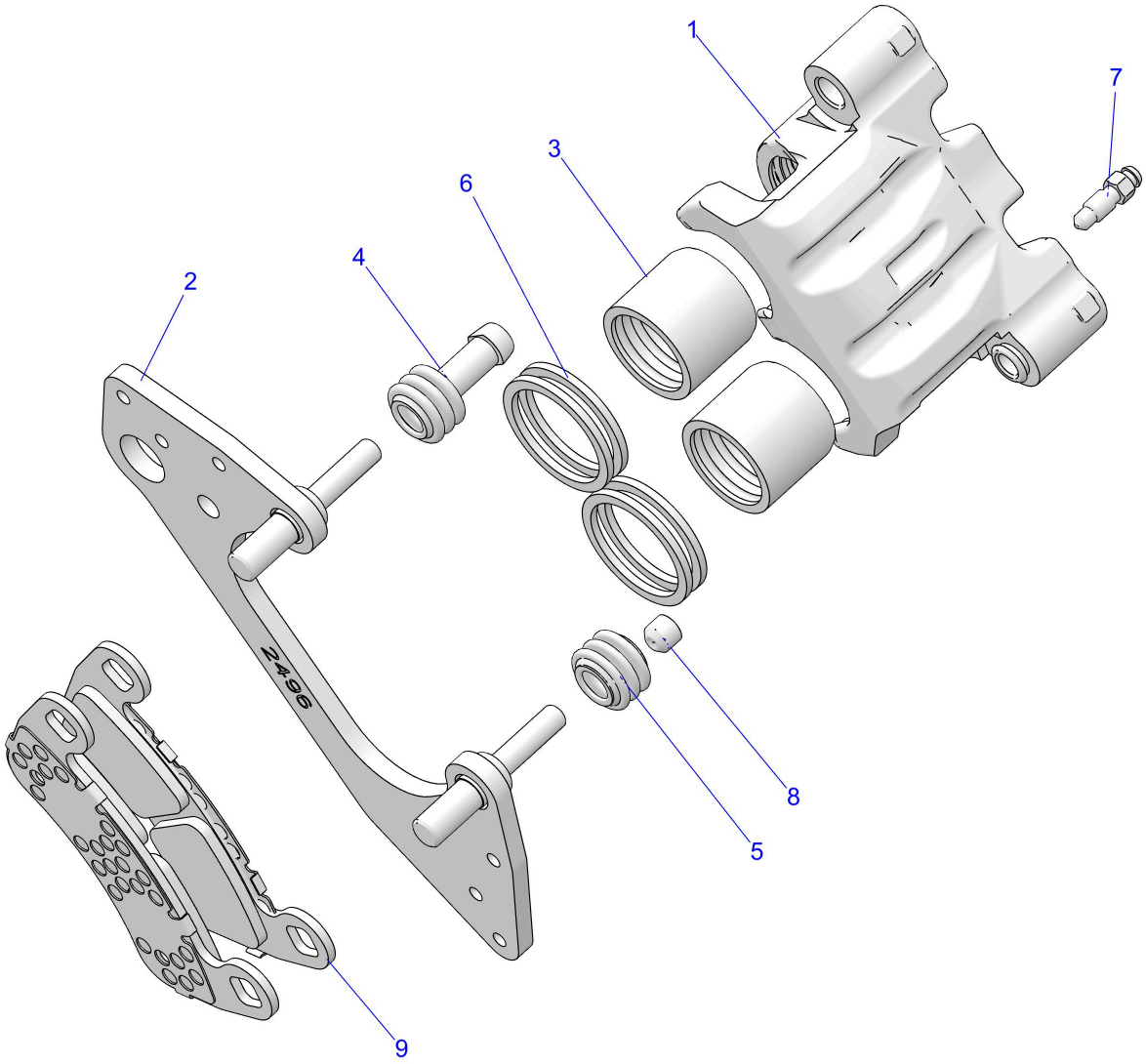

© 2023 Polaris Industries Inc.

C703376-1

Reference #	*Part#*	*Description*	*Quantity*
1	1913635	ASM-BRK-CAL,FR,DB-1-3/8,ALG,SS [INCL. ALL]	1
1	1913634	ASM-BRK-CAL,FL,DB-1-3/8,ALG,SS [INCL. ALL]	1
2	1912496	ASM-CAL/MNT,DB,1-3/8,METRIC	1
3	5138774	PISTON-BRAKE,1.375,AL,GROOVED	2
4	5412505	BOOT-PIN BUSHING	1
5	5412506	BOOT-PIN SEAL	1
6	5412907	SEAL-CALIPER,INNER,1.375"	4
7	7081343	SCR-M7X1.0,BLEEDER,OLIVE D	1
8	7518863	SCR-M10X1.0X8,SOC SET-OD	1
9	2211845	K-ASM,PAD,BRAKE [INCL. 2 PADS]	1

9	2211912	KIT,BRAKE PAD ASM(HEAVY DUTY) [OPTIONAL]	1

Copyright 1996-2026 Polaris Industries U.S.A All rights reserved.