BODY, DOORS, FRONT - Z26NMY99A4/B4/A6/B6 (C0704091-1)

2026 RZR - RZR XP S 4 1000 ULTIMATE (R01) - Z26NMY99A4/B4/A6/B6

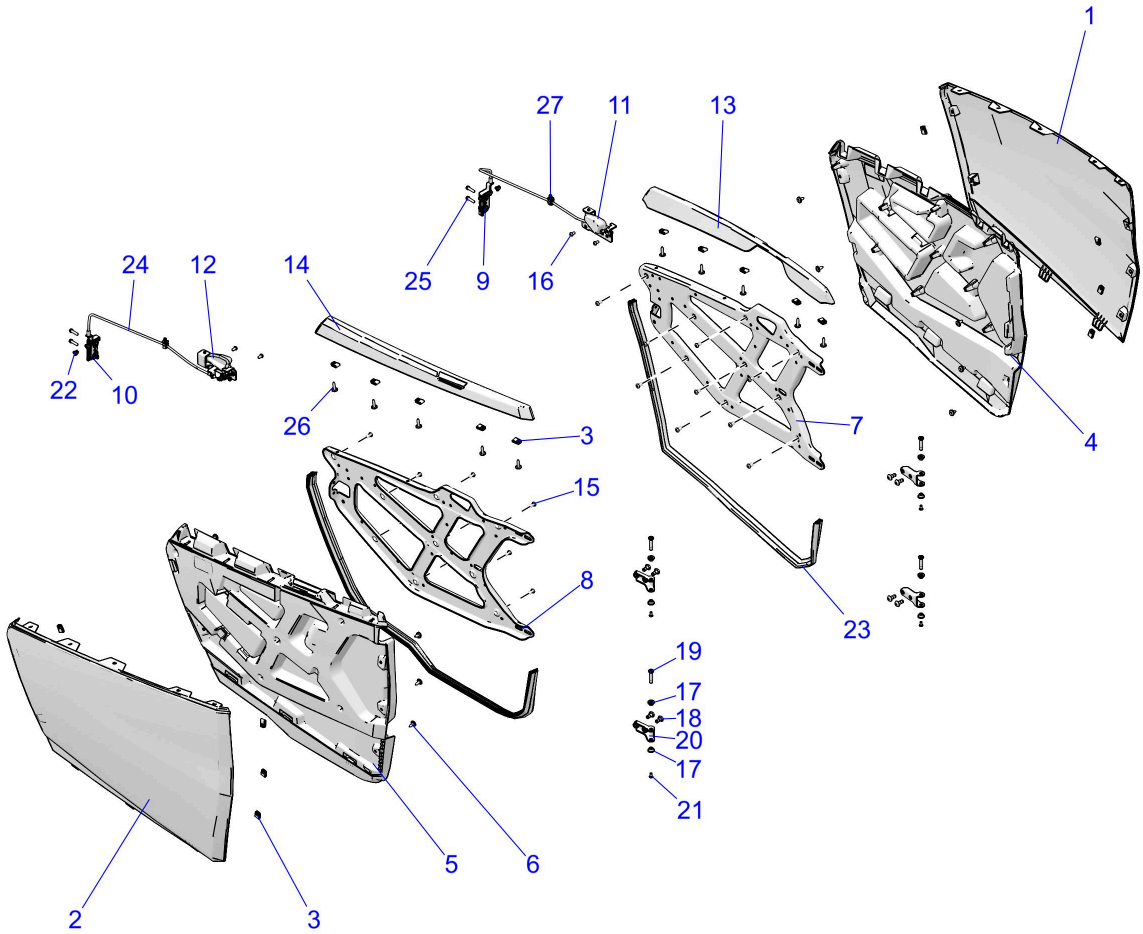

© 2021 Polaris Industries Inc. C0704091-1

Reference #	*Part#*	*Description*	*Quantity*
1	5459367-804	DOOR SKIN,LH,MIC,STLTH GR [A4/B4][STEALTH GRAY NON-METALLIC]	1
1	5459367-902	DOOR SKIN,LH,MIC,SD DUNE [A6/B6][SAND DUNE NON-METALLIC]	1
2	5459368-804	DOOR SKIN,RH,MIC,STLTH GR [A4/B4][STEALTH GRAY NON-METALLIC]	1
2	5459368-902	DOOR SKIN,RH,MIC,SD DUNE [A6/B6][SAND DUNE NON-METALLIC]	1
3	7547674	NUT-M6-1.0, U-TYPE (2.5-3.8)	AR
4	5459363-070	PANEL-DOOR,INNER,LH,MP,FRT,BLK	1
5	5459364-070	PANEL-DOOR,INNER,RH,MP,FRT,BLK	1
6	7518936	SCR-M6X1X16 TR/TX-M	10
7	5272538-458	STAMPING-DOOR FRAME,LH,BLK	1
8	5272539-458	STAMPING-DOOR FRAME,RH,BLK	1

9	7082759	ASM-LATCH,RTRY,2 STG,LH	1
10	7082760	ASM-LATCH,RTRY,2 STG,RH	1
11	2639143	ASM-ACTUATOR DOOR,LH	1
12	2639144	ASM-ACTUATOR DOOR,RH	1
13	5459359-070	DOOR CAP,LH,BLK	1
14	5459360-070	DOOR CAP,RH,BLK	1
15	7519045	SCR-TX TRUSS-#14X3/4, HI/LO ZBK	18
16	7519063	SCREW-TXBH-M6X1.0X12 8.8 ZPB D20	4
17	5450592	BUSHING, DOOR, PIVOT	8
18	7519997	SCR-TXTH-M8X1.25X20 8.8 ZB3 P3	8
19	7527956	SCR-TXWH-M5X0.8X40 10.9 ZTB SP	4
20	5270635	BRACKET, DOOR, HINGE	4
21	7517255	SCREW-FLHD-M5X0.8X12 10.9 P&O	4
22	5454637	CLIP-DOOR LATCH	2
23	5522386-1329	SEAL-WTHRSTRP,1329MM	2
24	7082973	CABLE-DOOR,FRONT	2
25	7519297	SCREW-HXFLG,M6X1.0X25,10.9	4
26	7519650	SCR-TXTH-M6X1.0X25 ZFB	10
27	7662310	CLIP-NYLON, C, FIR-TREE	2

Copyright 1996-2026 Polaris Industries U.S.A All rights reserved.