ENGINE, WATERPUMP ASSEMBLY - Z26NMY99A4/B4/A6/B6 (C730082)

2026 RZR - RZR XP S 4 1000 ULTIMATE (R01) - Z26NMY99A4/B4/A6/B6

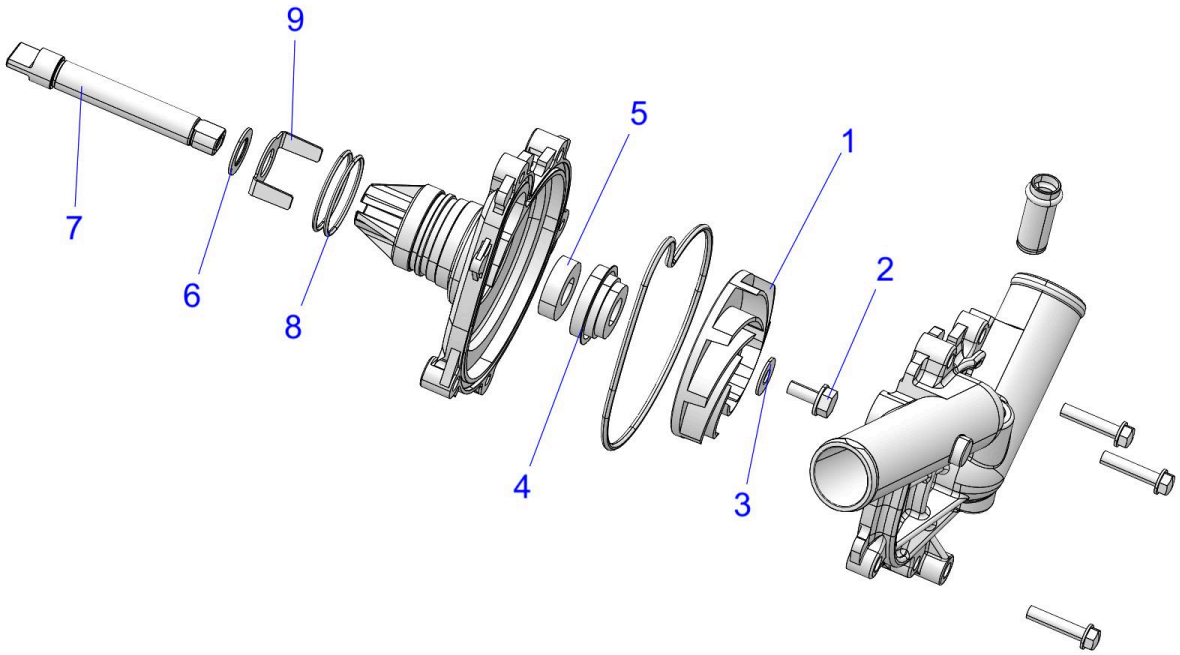

© 2021 Polaris Industries Inc.

C730082

Reference #	*Part#*	*Description*	*Quantity*
	1205014	ASM, WATERPUMP [INCL. ALL]	1
1	5633651	IMPELLER-WATERPUMP	1
2	7520485	SCREW-WATERPUMP	1
3	7556978	WASHER-IMPELLER	1
4	3610272	SEAL-WATERPUMP SHAFT,WATER	1
5	3610273	SEAL-WATERPUMP SHAFT,OIL	1
6	7556980	WASHER-WATERPUMP	1
7	5140683	SHAFT-WATERPUMP	1
8	5415946	O-RING,WATERPUMP	1
9	7556979	WASHER-CLAWED	1

Copyright 1996-2026 Polaris Industries U.S.A All rights reserved.