ENGINE, EXHAUST SYSTEM - Z26NMY99A4/B4/A6/B6 (C703338)

2026 RZR - RZR XP S 4 1000 ULTIMATE (R01) - Z26NMY99A4/B4/A6/B6

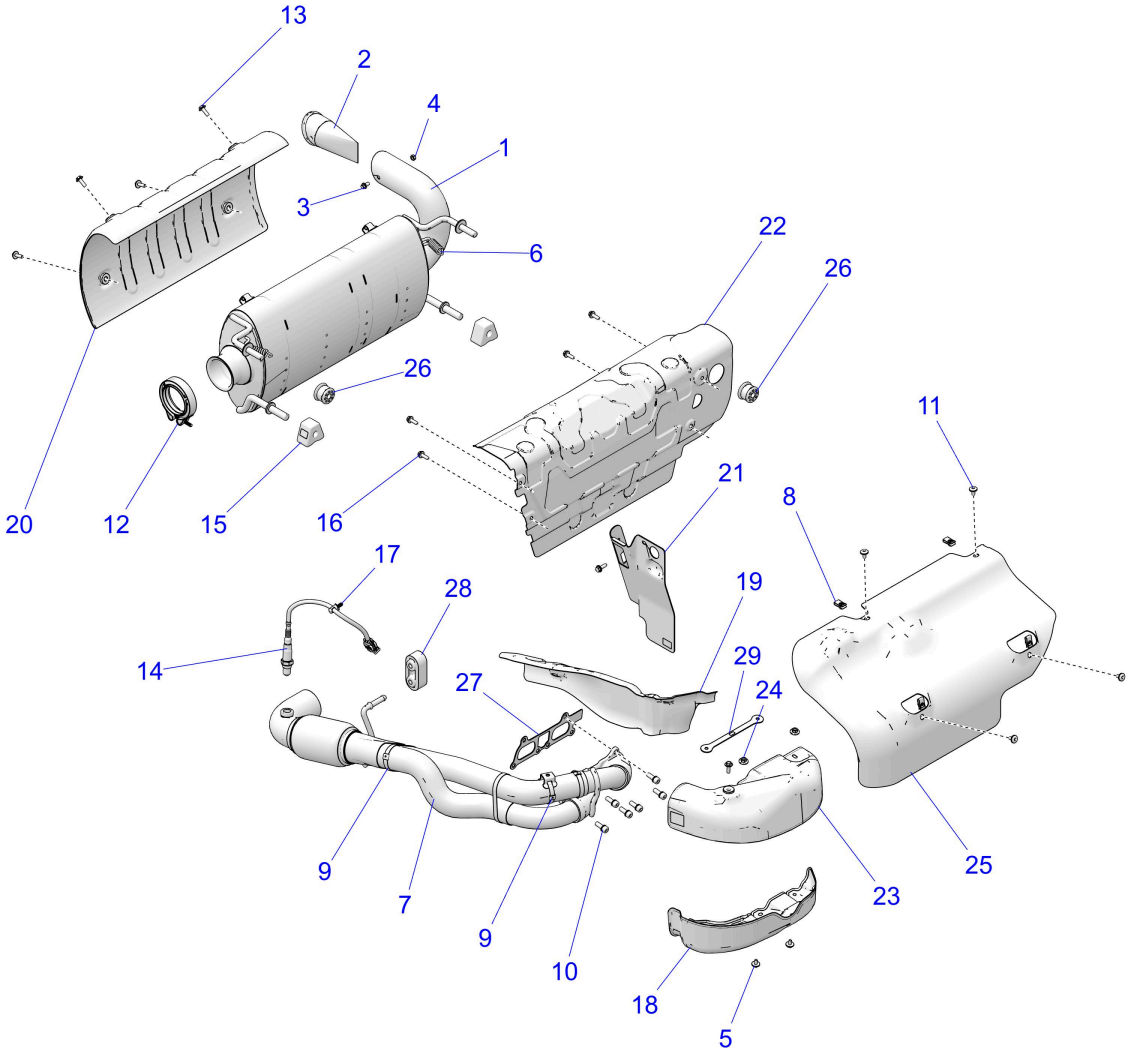

© 2023 Polaris Industries Inc. C703338

Reference #	*Part#*	*Description*	*Quantity*
1	1263824	ASM-SILENCER [INCL. 2-4,QTY. 4 of 13,20]	1
2	1263697	WELD-SPARK ARRESTOR	1
3	7517257	SCREW-HXFL-M6X1.0X12 10.9 ZPC	1
4	7547120	NUT-HEX-M6X1.0 8 SPC	1
5	7520291	SCR-HHSEMS-M6X1.0X10 A286,LOCK	2
6	7045211	SPRING-EXHAUST	2
7	1263881	ASM-HEADPIPE [INCL. 5,9,18,19]	1
8	7081305	CLIP-U SPEED NUT	4
9	7081579	CLAMP, HEAT SHIELD,EXHAUST	4
10	7518984	SCR-HXFL-M5X0.8X12 4.8 ZPC NYL	6

11	7518936	SCR-M6X1X16 TR/TX-M	4
12	7082494	CLAMP, GASKETED	1
13	7520995	SCR-HHSEMS-M6X1.0X19 A286,LOCK	5
14	4011853	SENSOR-LAMBDA,LSF 4.2	1
15	5417101	MNT-ISOLATOR	2
16	5415027	MOUNT, ISOLATOR	1
17	7081496	CLIP FIR-TREE,DIA6-33MM	1
18	5272665	SHIELD-HEAT,HEADPIPE,FRONT UPR	1
19	5273872	SHIELD-HEAT,HEADPIPE,INNER [ONLY SERVICEABLE WITH 1263881]	1
20	5272179	SHIELD-SILENCER	1
21	5274148	SHIELD-HEAT,SIDE,EXHAUST	1
22	5273911	SHIELD-HEAT, REAR	1
23	5272665	SHIELD-HEAT,HEADPIPE,FRONT UPR	1
24	7548005	NUT-HEX M6X1.0 8 ZPC SPC	2
25	5815213	SHIELD-HEAT,FRONT	1
26	5417758	ISOLATOR-EXHAUST,HANGER	3
27	3610357	GASKET-EXHAUST SEAL	1
28	5415027	MOUNT, ISOLATOR	1
29	5274332	BRKT-WASHER,EXHAUST,STRAP	1

Copyright 1996-2026 Polaris Industries U.S.A All rights reserved.