BODY, SEAT ASM. AND SLIDER, FRONT - Z26NMY99A4/B4/A6/B6 (C760078)

2026 RZR - RZR XP S 4 1000 ULTIMATE (R01) - Z26NMY99A4/B4/A6/B6

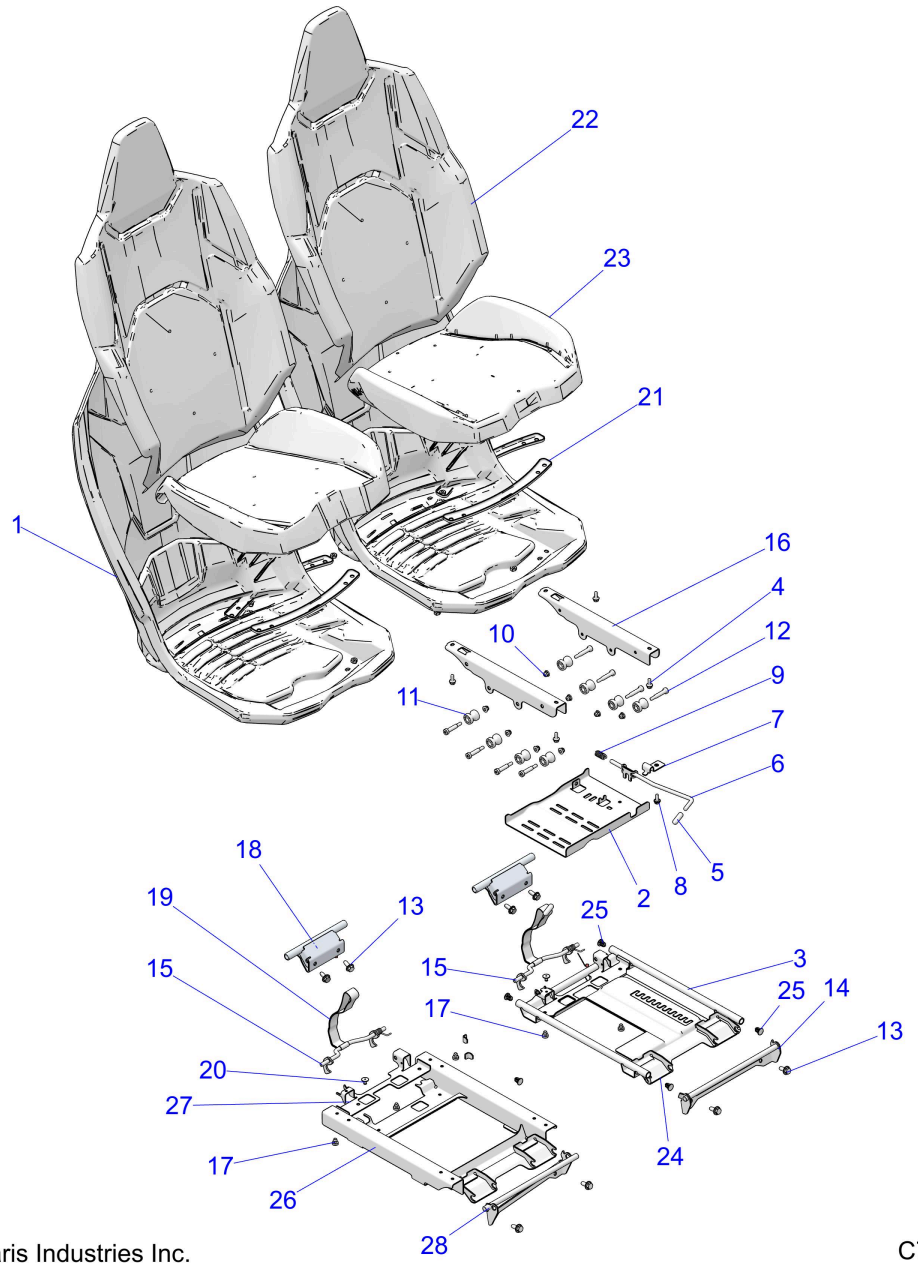

© 2025 Polaris Industries Inc. C760078

Reference #	*Part#*	*Description*	*Quantity*
1	5459426	SEAT-SHELL	2
2	2637765	ASM-SEAT BASE-SLIDER [INCL. 5-9]	2
3	2639145	ASM-SEAT BASE-STATIC [INCL. 17, 19-20]	2
4	7518591	SCREW-HXFL-M6X1.0X16 8.8 ZPB	8
5	5457972	CAP-LEVER	2
6	1028112-329	WELD-SEAT BASE,ECOAT	2
7	5268611-329	BRKT-P-CLIP,SEAT SLIDER,ECOAT	2
8	7521354	SCR-M6X1X16 TR/TX,TRI-LOB	2
9	7045595	SPRING-SEAT ADJUSTER	2
10	7548043	NUT-HXFL-M6X1.0 8 ZB3 NYL	16

11	5456629	ROLLER-SEAT SLIDER	16
12	7521353	SCR-SHS-M6X1.0-M8X30	16
13	7518555	SCR-TFHFL-M8X1.25X20 CHS ZOD	8
14	1027797-329	WELD-FRONT MOUNT,SLIDER,ECOAT	2
15	1026909-329	WELD-HOOK,REAR,ECOAT	2
16	1025336-329	WELD-SEAT BASE,SLIDER,ECOAT	2
17	5417657	BUMPER-RUBBER	4
18	1027799-329	WELD-REAR LATCH,ECOAT	2
19	2691935	STRAP-SEAT	2
20	7621472	RIVET 3/16(.063-.250)ST-ST-LF-B	2
21	1027788	ASM-SEAT SUPPORT	4
22	2639660	ASM-SEAT,BUN,BACK [INCLS. BUN]	2
22	5814977	BUN-SEAT,BACK	2
22	2693355	ASM-CVR-SEATBACK,BLK/TTM,BK ST [COVER ONLY][A4/B4]	2
22	2693682	ASM-CVR-SEAT BACK,BLK/PORG,B S [COVER ONLY][A6/B6]	2
23	2639641	ASM-SEAT,BUN,BOTTOM [INCLS. BUN]	2
23	5814978	BUN-SEAT,BOTTOM	2
23	2693356	ASM-CVR-SEAT BTM,BLK/TTM,BK ST [COVER ONLY][A4/B4]	2
23	2693683	ASM-CVR-SEAT BTM,BLK/PORG,B S [COVER ONLY][A6/B6]	2
24	1028112-329	WELD-SEAT BASE,ECOAT	1
25	5457971	PLUG-PLASTIC	8
26	2639142	ASM-SEAT MOUNT,STATIC [INCL. 15,17,19,20,24,27]	1
27	1028113-329	WELD-SEAT MNT,STATIC,ECOAT	1
28	1027798-329	WELD-FRONT MOUNT,STATIC,ECOAT	1

Copyright 1996-2026 Polaris Industries U.S.A All rights reserved.