ELECTRICAL, HEADLIGHTS AND TAILLIGHTS - Z26NMY99A4/B4/A6/B6 (C750927)

2026 RZR - RZR XP S 4 1000 ULTIMATE (R01) - Z26NMY99A4/B4/A6/B6

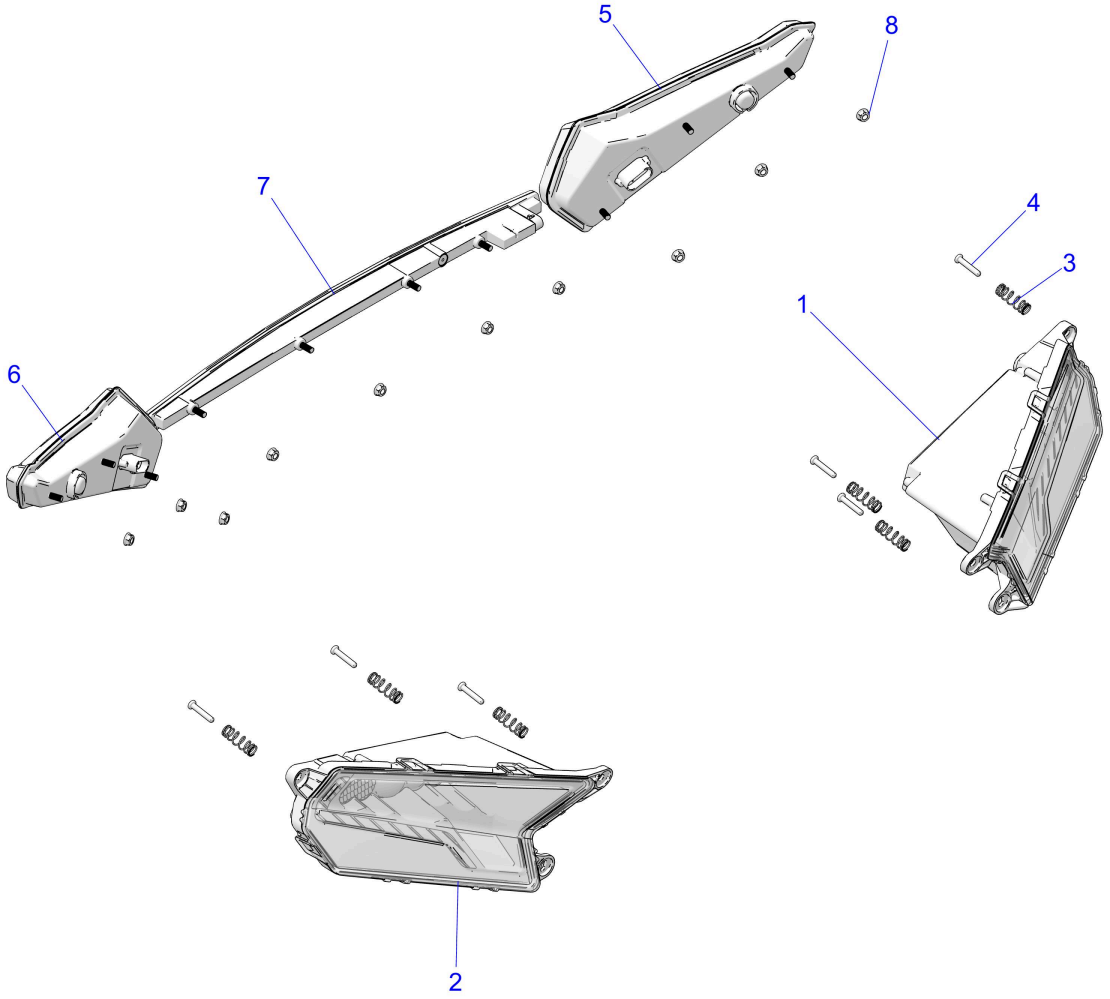

© 2025 Polaris Industries Inc.

C750927

Reference #	*Part#*	*Description*	*Quantity*
1	2415180	ASM-HEADLIGHT,LED,LH	1
2	2415181	ASM-HEADLIGHT,LED,RH	1
3	7043816	SPRING,HEADLIGHT	6
4	7512078	SCR-10X1.12 TX PN PLS-Y	6
5	2415182	ASM-TAILLIGHT,LH	1
6	2415183	ASM-TAILLIGHT,RH	1
7	2415313	TAILLIGHT-CENTER	1
8	7547270	NUT-HXFLGHD, M6, SERRATED	6

Copyright 1996-2026 Polaris Industries U.S.A All rights reserved.