ENGINE, CRANKCASE AND CRANKSHAFT - Z26NMY99A4/B4/A6/B6 (C703086)

2026 RZR - RZR XP S 4 1000 ULTIMATE (R01) - Z26NMY99A4/B4/A6/B6

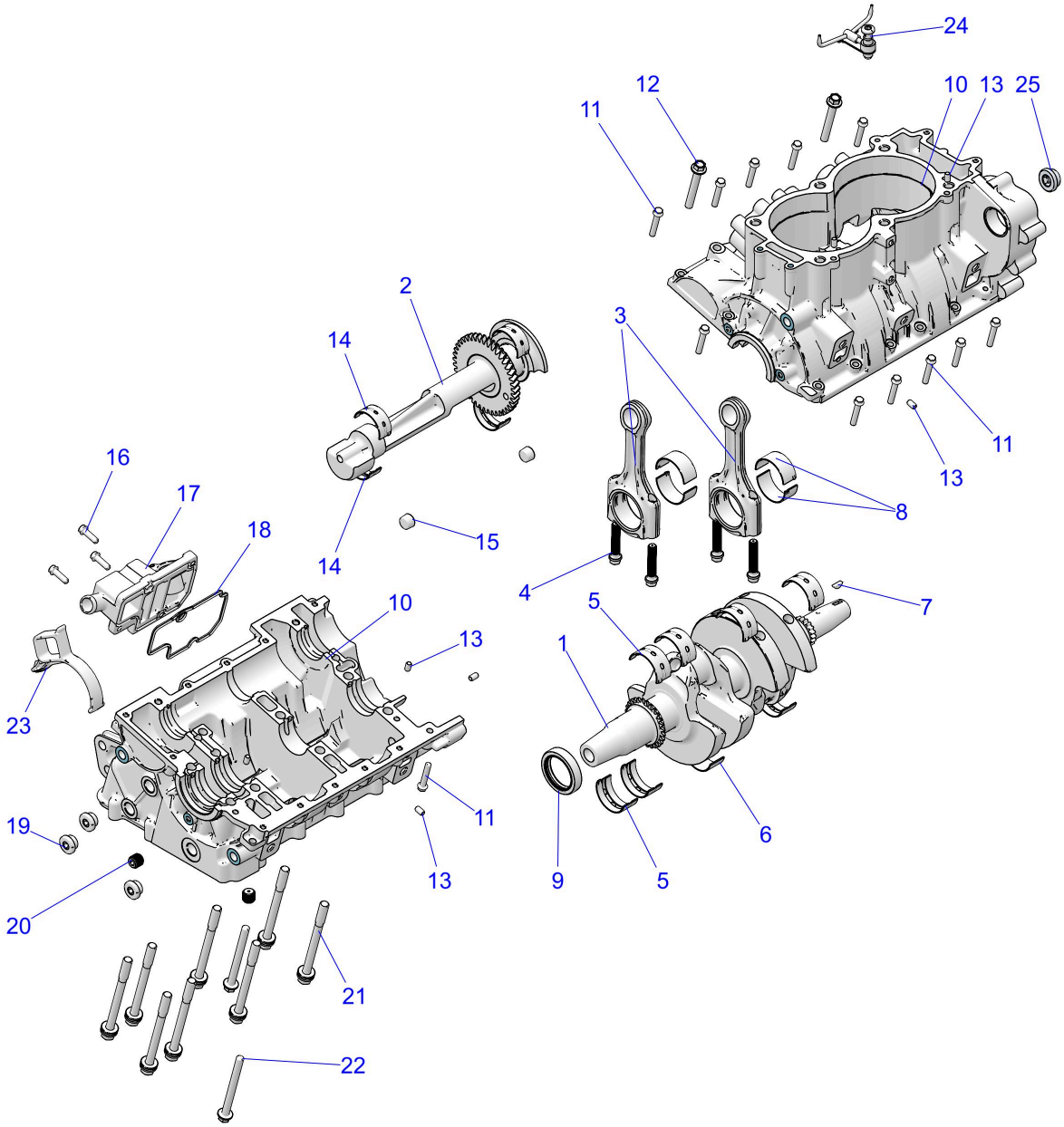

© 2021 Polaris Industries Inc. C703086

Reference #	*Part#*	*Description*	*Quantity*
1	3024057	ASM-CRANKSHAFT	1
2	1204835	ASM-BALANCE SHAFT	1
3	3024355	ASM-CONNECTING ROD [INCL. 4]	2
4	7520356	BOLT-CONROD MJ9X1.0X44	4
5	3515160-001	BEARING-MAIN,G-90,41MM	7
5	3515160-002	BEARING, MAIN, BLUE	7
5	3515160-003	BEARING, MAIN, GREEN	7
5	3515160-004	BEARING, MAIN, YELLOW	7
5	3515160-005	BEARING, MAIN, RED	7
6	3515161-002	BEARING-MAIN LRW, BLUE	1

6	3515161-003	BEARING-MAIN LRW, GREEN	1
6	3515161-004	BEARING-MAIN LRW, YELLOW	1
7	7721122	KEY-WOODRUFF,4X5	1
8	3515159-001	BEARING, CONNECTING ROD, WHITE	4
8	3515159-002	BEARING, CONNECTING ROD, BLUE	4
8	3515159-003	BEARING, CONNECTING ROD, GREEN	4
8	3515159-004	BEARING, CONNECTING ROD, YELLOW	4
9	3610284	SEAL-CRANKSHAFT	1
10	-------	K-CRANKCASE	1
11	7518578	SCR-HXFL-M6X1.0X35 8.8 ZY3	12
12	7519186	SCR-HXFLG,M8X1.25X60	2
13	5143560	PIN-DOWEL,M6X10	8
14	3514756	BEARING-BAL SHAFT,38X41X17.5	4
15	7052413	PLUG-3/8 NPT,HX/SOC W/SEALANT	2
16	7518576	SCREW-HXFL-M6X1.0X20 8.8 ZY3	3
17	5143720	COVER-BREATHER,MACH	1
18	5815811	SEAL-COVER,BREATHER	1
19	7052642	PLUG-HEX SCKT,W/O-RING,M16X1.5	3
20	7518835	PLUG-HEX SOCKET,1/4X18,SEALANT	2
21	7527904	SCR-HXFL,M10X1.25X113MM 10.9	8
22	7519154	SCR-HXFLG,M8X1.25X90	2
23	5455583	DIVERTER, OIL DRAIN	1
24	3022856	JET, PISTON	1
25	7052643	PLUG-HEX SCKT,W/O-RING,M20X1.5	1

Copyright 1996-2026 Polaris Industries U.S.A All rights reserved.