BODY, SEAT ASM. REAR - Z26NMY99A4/B4/A6/B6 (C0703972-10)

2026 RZR - RZR XP S 4 1000 ULTIMATE (R01) - Z26NMY99A4/B4/A6/B6

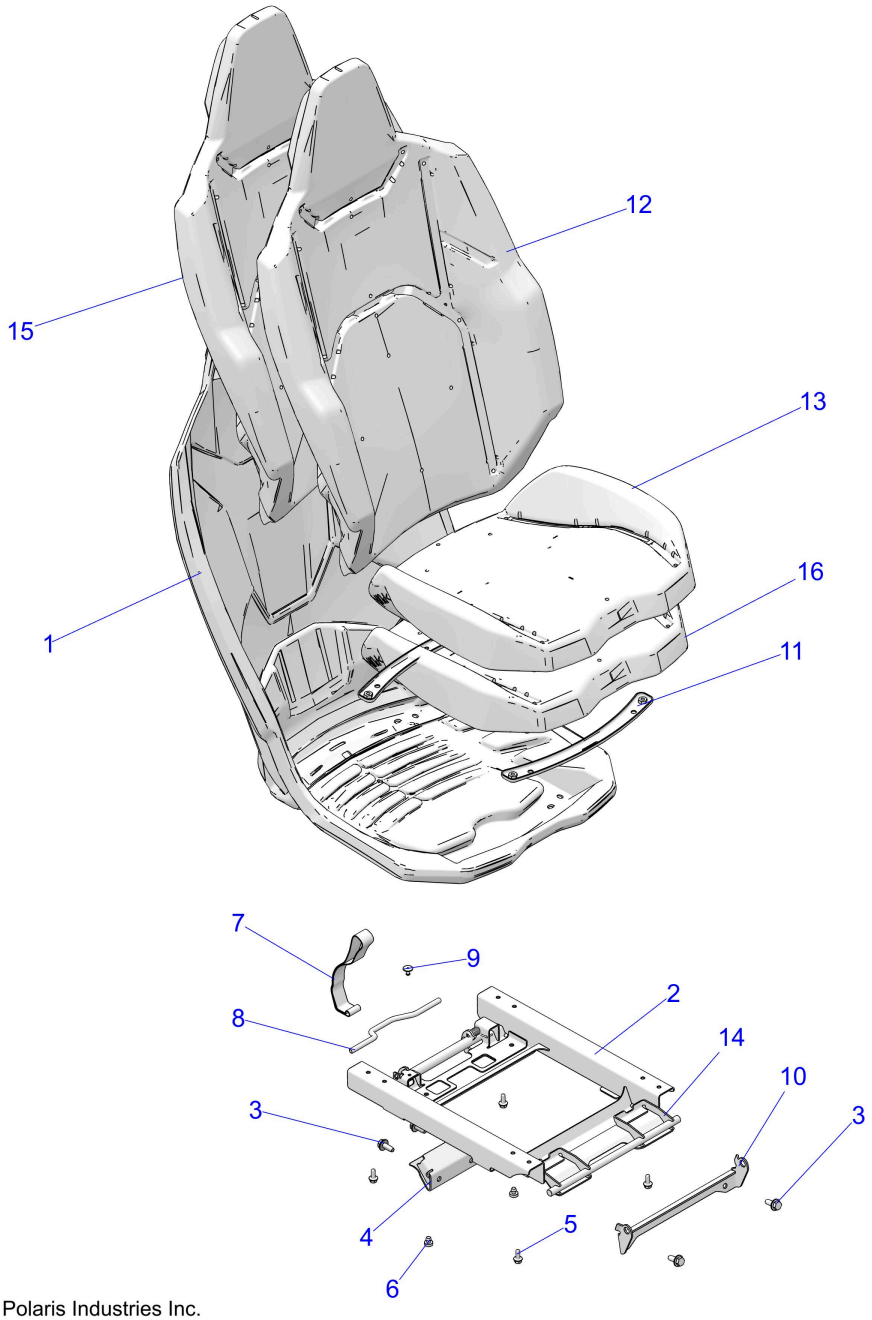

© 2025 Polaris Industries Inc. C0703972-10

Reference #	*Part#*	*Description*	*Quantity*
1	5459426	SEAT-SHELL	2
2	1028113-329	WELD-SEAT MNT,STATIC,ECOAT	2
3	7518555	SCR-TFHFL-M8X1.25X20 CHS ZOD	8
4	1027799-329	WELD-REAR LATCH,ECOAT	2
5	7518591	SCREW-HXFL-M6X1.0X16 8.8 ZPB	8
6	5417657	BUMPER-RUBBER	4
7	2691935	STRAP-SEAT	2
8	1026909-329	WELD-HOOK,REAR,ECOAT	2
9	7621472	RIVET 3/16(.063-.250)ST-ST-LF-B	2
10	1027798-329	WELD-FRONT MOUNT,STATIC,ECOAT	2

11	1027788	ASM-SEAT SUPPORT	4
12	2693355	ASM-CVR-SEATBACK,BLK/TTM,BK ST [COVER ONLY][A4/B4]	2
12	2693682	ASM-CVR-SEAT BACK,BLK/PORG,B S [COVER ONLY][A6/B6]	2
13	2693356	ASM-CVR-SEAT BTM,BLK/TTM,BK ST [COVER ONLY][A4/B4]	2
13	2693683	ASM-CVR-SEAT BTM,BLK/PORG,B S [COVER ONLY][A6/B6]	2
14	2639142	ASM-SEAT MOUNT,STATIC	2
15	5814977	BUN-SEAT,BACK	2
16	5814978	BUN-SEAT,BOTTOM	2

Copyright 1996-2026 Polaris Industries U.S.A All rights reserved.