BODY, REAR CLOSEOFF - Z26NMY99A4/B4/A6/B6 (C0704087-2)

2026 RZR - RZR XP S 4 1000 ULTIMATE (R01) - Z26NMY99A4/B4/A6/B6

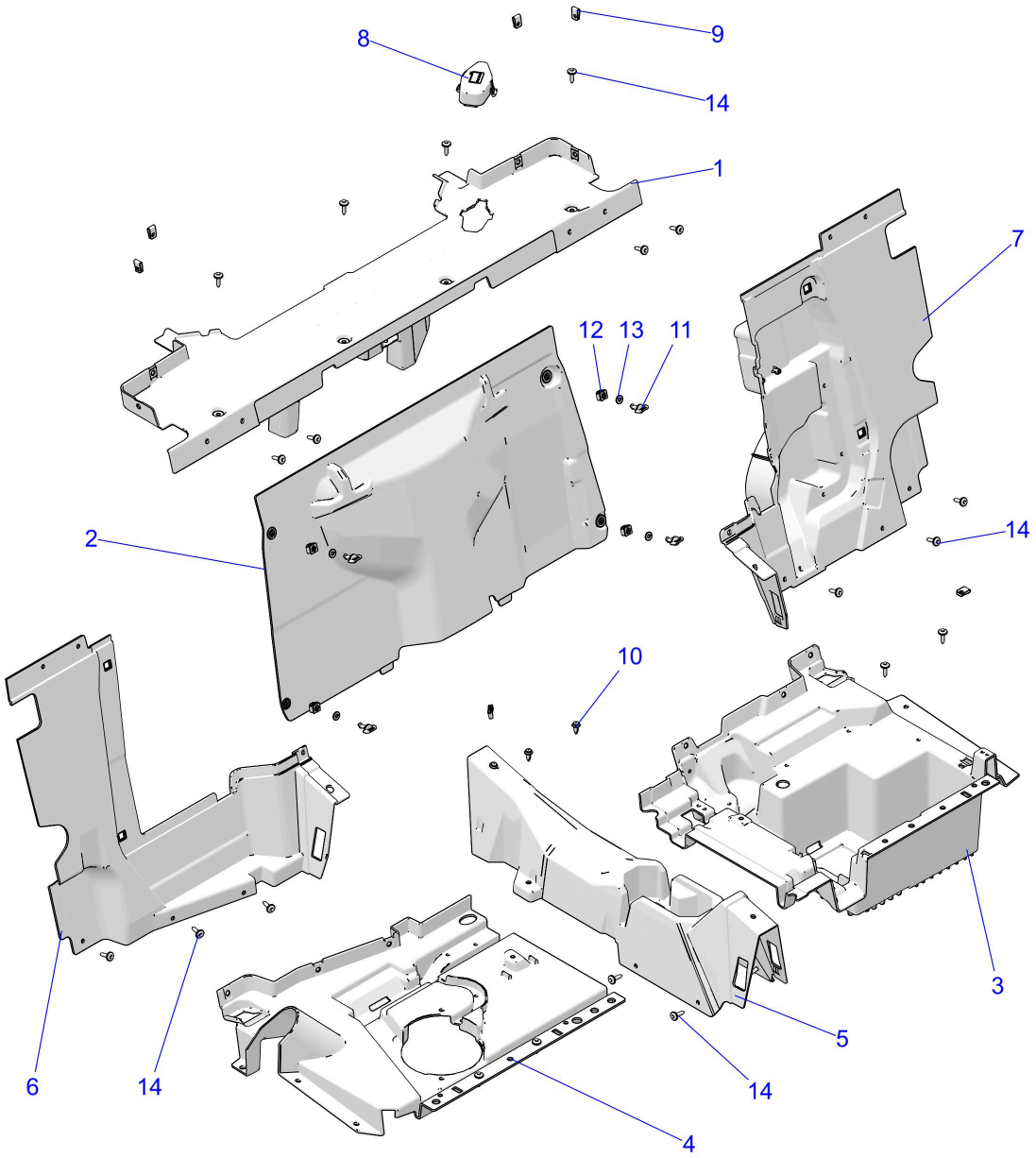

© 2021 Polaris Industries Inc. C0704087-2

Reference #	*Part#*	*Description*	*Quantity*
1	2638763	ASM-REAR UPPER CLOSEOUT [INCLUDES 9]	1
2	5456556-070	PANEL,ENGINE ACCESS,BLK	1
3	5456550-070	UNDERSEAT CLOSEOUT,LH,BLK	1
4	5456551-070	UNDERSEAT CLOSEOUT,RH,BLK	1
5	5456574-070	CENTER CONSOLE,REAR,BLK	1
6	5456554-070	CLOSEOUT,REAR,LWR,RH,BLK	1
7	5459428-070	CLOSEOUT,REAR,LWR,LH,BLK	1
8	5457970	COVER-COOLANT ACCESS	1
9	7547674	NUT-M6-1.0, U-TYPE (2.5-3.8)	AR
10	7661855	RIVET-TUFLOK,.315-.325X.787	AR

11	7662384	STUD-1/4 TURN,NYLON	4
12	7710933	CLIP-1/4 TURN	4
13	7710919	CLIP-RETAINER,1/4 TURN	4
14	7519650	SCR-TXTH-M6X1.0X25 ZFB	AR

Copyright 1996-2026 Polaris Industries U.S.A All rights reserved.