ENGINE, CYLINDER AND PISTON - Z26NMY99A4/B4/A6/B6 (C703087)

2026 RZR - RZR XP S 4 1000 ULTIMATE (R01) - Z26NMY99A4/B4/A6/B6

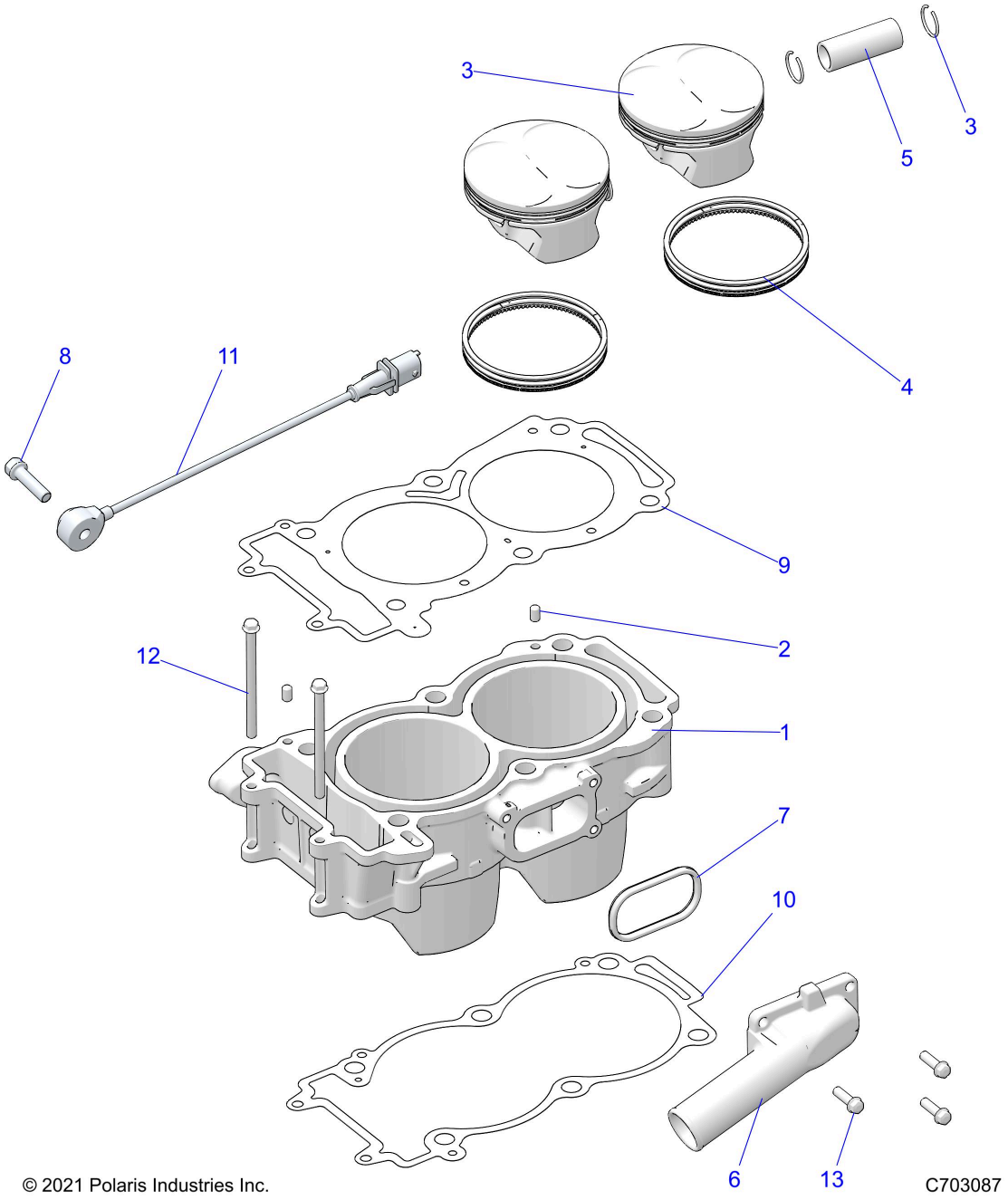

© 2021 Polaris Industries Inc.

Reference #	Part#	Description	Quantity
1	3024167	ASM-CYLINDER,999 [INCL. 2]	1
2	5132835	PIN-DOWEL,M6X10	2
3	3022413	RING-RTG,ROUND,20.0X1.6	4
3	3024213	ASM-PISTON [INCL. 4,5]	2
4	-------	KIT, PISTON RINGS [INCL. SET FOR 1 PISTON]	2
5	3022358	PIN-PISTON	2
6	5632557	COVER-WATER INLET,CAST	1
7	5813736	GASKET-WATER,INLET	1
8	7517262	SCREW-M8X1.25X30,HX/FL-YD	1
9	5814793	GASKET-CYLINDER,HEAD	1

10	5272850	GASKET-BASE,2 CYL	1
11	2410369	SENSOR-DETONATION BOSCH	1
12	7528130	SCR-SHFL-M6X1.0X40 10.9 ZY3	2
13	7518576	SCREW-HXFL-M6X1.0X20 8.8 ZY3	3

Copyright 1996-2026 Polaris Industries U.S.A All rights reserved.