**SUSPENSION, REAR SHOCK INTERNALS - Z26NMY99A4/B4/A6/B6 (7046373)**

**2026 RZR - RZR XP S 4 1000 ULTIMATE (R01) - Z26NMY99A4/B4/A6/B6**

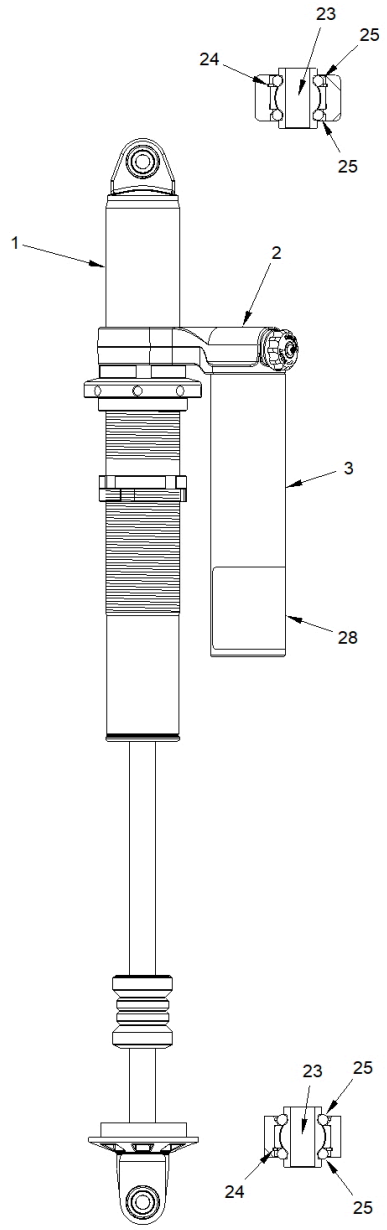


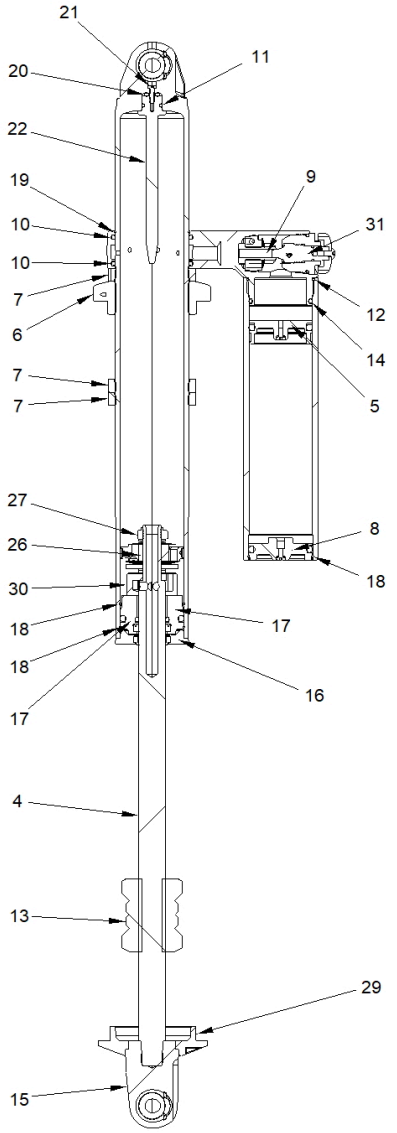


© 2025 Polaris Industries Inc.

7046373

| Reference # | Part# | Description | Quantity |
|---|---|---|---|
| | 7046373 | SHOCK-REAR,LH [INCLUDES 1-32] | 2 |
| | 7046374 | SHOCK-REAR,RH [INCLUDES 1-32] | 2 |
| 1 | ------- | BODY-SHOCK,2.5",19.265L | 1 |
| 2 | ------- | BRIDGE,2.5 WER ADJUSTER,FORGED,EXT | 1 |
| 3 | ------- | 2.5IN 9.5L PBRES CAN WR(ANODIZE HARD CLEAR) | 1 |

| | | | |
|---|---|---|---|
| 4 | ------- | SHAFT-NEEDLE .875 X 18.162L | 1 |
| 5 | ------- | ASM-IFP,2.5',TYP III CLR | 1 |
| 6 | ------- | 2.5IN SPRING NUT | 1 |
| 7 | ------- | 2.5IN CROSSOVER RING/JAM NUT | 3 |
| 8 | ------- | END CAP ASSY-2.5,WIRE RING BULIT IN CHARGE PORT | 1 |
| 9 | ------- | VALVE,CHECK ASSEMBLY | 1 |
| 10 | ------- | O-RING 2-230 | 2 |
| 11 | ------- | O-RING 2-112 | 1 |
| 12 | ------- | O-RING 2-033 | 1 |
| 13 | ------- | 2.50 BUMP STOP | 1 |
| 14 | ------- | O-RING 2.225 | 1 |
| 15 | ------- | SHAFT LOOP, 1.0935 BORE,BRNG STEP,2.930L | 1 |
| 16 | ------- | WIPER CAP ASM. 2.5PRESS FIT | 1 |
| 17 | ------- | ASM. SEAL HEAD 2.5 X .875 PI | 1 |
| 18 | ------- | ID RETAINING RING2.5" | 1 |
| 19 | ------- | OD RETAINING RING,2.5" | 3 |
| 20 | ------- | O-RING 2.202 | 1 |
| 21 | ------- | #8-32 X.500LOW HEAD SCREW | 1 |
| 22 | ------- | NEEDLE,1 PIECE PRESS IN | 1 |
| 23 | ------- | BEARING-SPHRL,12MM16.8DEG | 1 |
| 24 | ------- | RETAINING RING FOR 1.0625 BORE | 2 |
| 25 | ------- | O-RING 2-312 | 4 |
| 26 | ------- | ASM-PSTN,2.5",7046373 | 1 |
| 27 | ------- | NUT,FLEXLOC,THIN, 5/8-18 | 1 |
| 28 | ------- | DECAL-SHOCK,7046373 | 1 |
| 29 | 1501211 | RETAINER-SPRING,2.5" | 1 |
| 30 | ------- | CHECKVALVE-3PORT,.72L,2X.086 | 1 |
| 31 | ------- | ASM-SS RETENTION NUT | 1 |

Copyright 1996-2026 Polaris Industries U.S.A All rights reserved.