BODY, ROCKER PANELS - Z26NMY99A4/B4/A6/B6 (C0704087-3)

2026 RZR - RZR XP S 4 1000 ULTIMATE (R01) - Z26NMY99A4/B4/A6/B6

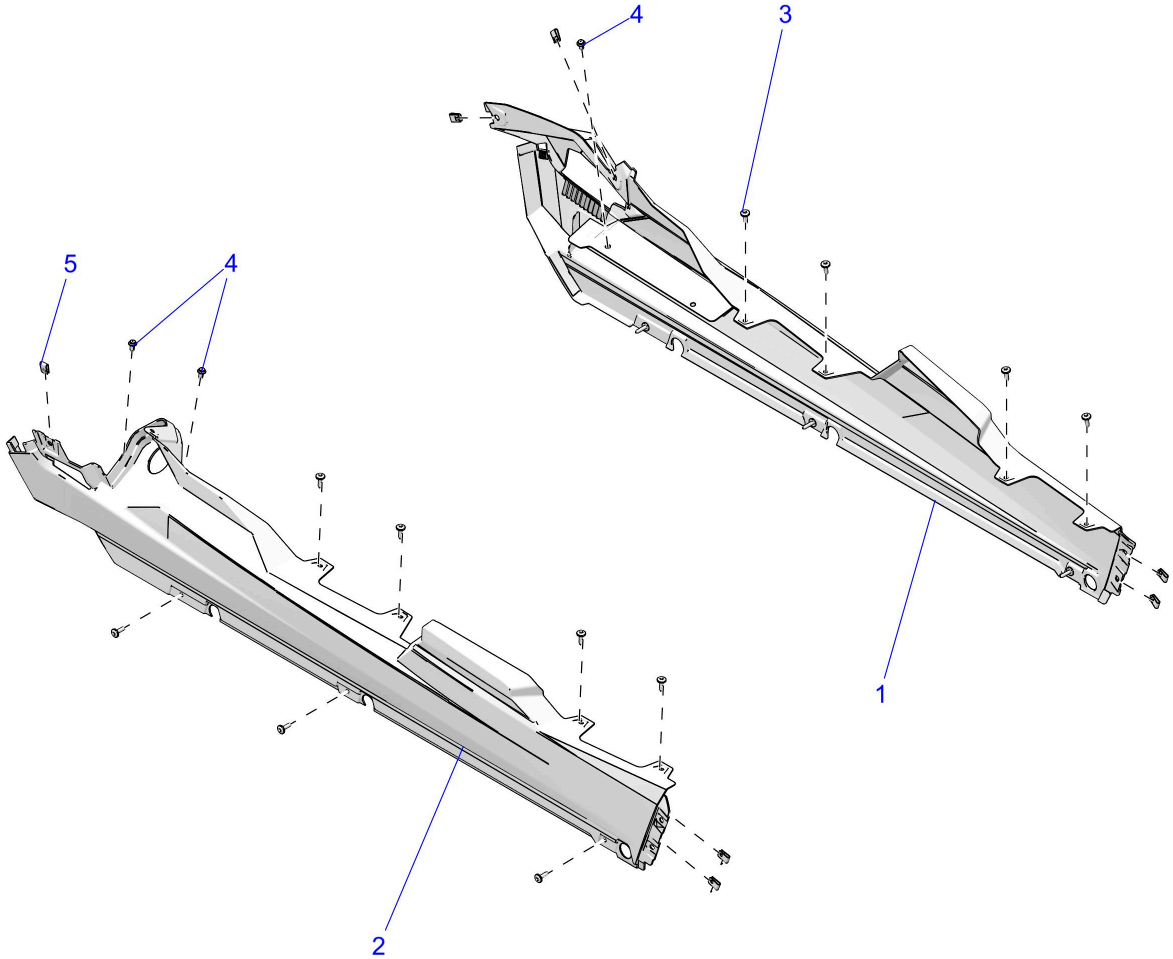

© 2021 Polaris Industries Inc. C0704087-3

Reference #	*Part#*	*Description*	*Quantity*
1	5456572-070	PANEL,ROCKER,LH,MP,BLK	1
2	5456573-070	PANEL,ROCKER,RH,MP,BLK	1
3	7519650	SCR-TXTH-M6X1.0X25 ZFB	14
4	7661855	RIVET-TUFLOK,.315-.325X.787	3
5	7547674	NUT-M6-1.0, U-TYPE (2.5-3.8)	7

Copyright 1996-2026 Polaris Industries U.S.A All rights reserved.