DRIVE TRAIN, FRONT GEARCASE MOUNTING - Z26NMY99A4/B4/A6/B6 (C730987)

2026 RZR - RZR XP S 4 1000 ULTIMATE (R01) - Z26NMY99A4/B4/A6/B6

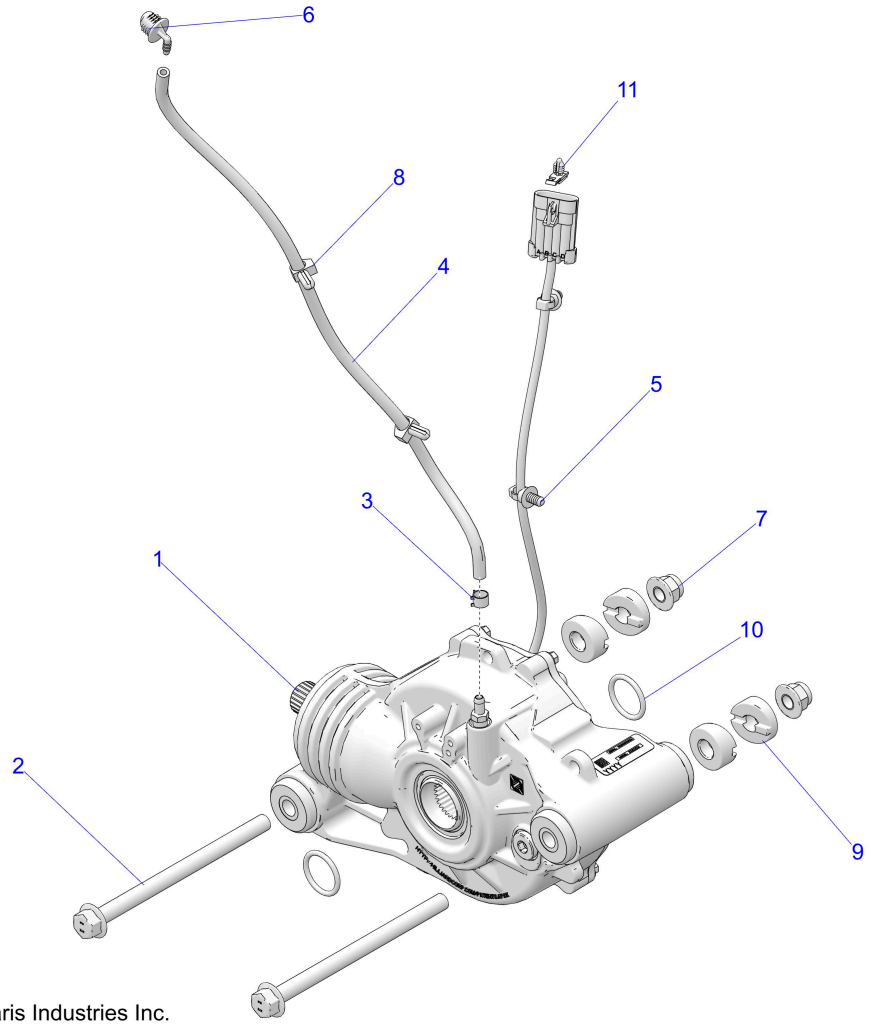

© 2023 Polaris Industries Inc. C730987

Reference #	*Part#*	*Description*	*Quantity*
1	-------	ASM-GEARCASE,FRONT [FOR ASM SEE DRIVE TRAIN, FRONT GEARCASE INTERNALS]	1
2	7520294	SCR-HXFL-M12X1.5X170 10.9 ZOD	2
3	7080307	CLAMP-HOSE, (LARGE GREEN)	1
4	8450153-50	LINE-BOOST,3/16 ID,50CM	1
5	7081496	CLIP FIR-TREE,DIA6-33MM	2
6	5454069	FITTING-VENT LINE,90	1
7	7547334	NUT-M12X1.5, FLG, NYLOC-OLIVE D	2
8	7670102	CLIP-SILENCER BOX-C,98 INDY	2
9	5639193	ANCHOR-WEDGE LOCK	4
10	5418014	O-RING,28.17X3.53,VITON,60A	2
11	7670116	CLIP, ROUTING, .472 B.D., HINGED	1

Copyright 1996-2026 Polaris Industries U.S.A All rights reserved.