BODY, REAR RACK - Z26NMY99A4/B4/A6/B6 (C0705025-10)

2026 RZR - RZR XP S 4 1000 ULTIMATE (R01) - Z26NMY99A4/B4/A6/B6

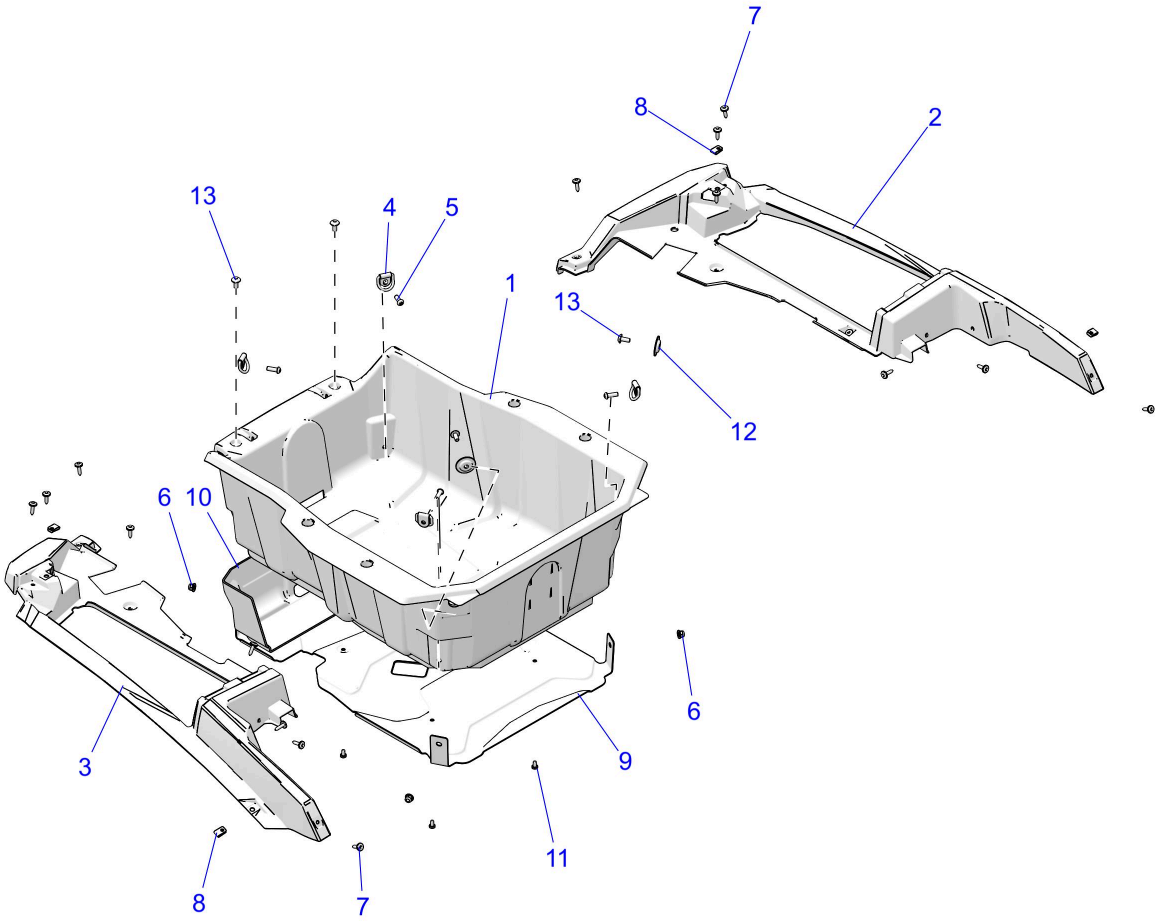

© 2021 Polaris Industries Inc. C0705025-10

Reference #	*Part#*	*Description*	*Quantity*
1	2638107	ASM-CARGO BOX,CMP MLD [INCL. 4-6, 9-11]	1
2	5456546-070	BOX-SIDE,LH-BLACK	1
3	5456547-070	BOX-SIDE,RH-BLACK	1
4	7081195	RING,TIEDOWN 700087	4
5	7519728	SCR-TXBH-M8X1.25X25 8.8 ZB	4
6	7547317	NUT-M8X1.25,HXFLG,NYLON INS	4
7	7519650	SCR-TXTH-M6X1.0X25 ZFB	AR
8	7547674	NUT-M6-1.0, U-TYPE (2.5-3.8)	AR
9	5268567	SHIELD-HEAT,TUB	1
10	5272828	SHIELD-BOX,REAR	1

11	7519060	SCR-#14X1/2 PHPN HILO STL ZNC	4
12	7558749	WASHER-STEPPED	2
13	7528105	SCR-TXTH-M8X1.25X20 8.8 ZTB SP	2

Copyright 1996-2026 Polaris Industries U.S.A All rights reserved.