ENGINE, OIL PUMP - Z26NMY99A4/B4/A6/B6 (C701070-4)

2026 RZR - RZR XP S 4 1000 ULTIMATE (R01) - Z26NMY99A4/B4/A6/B6

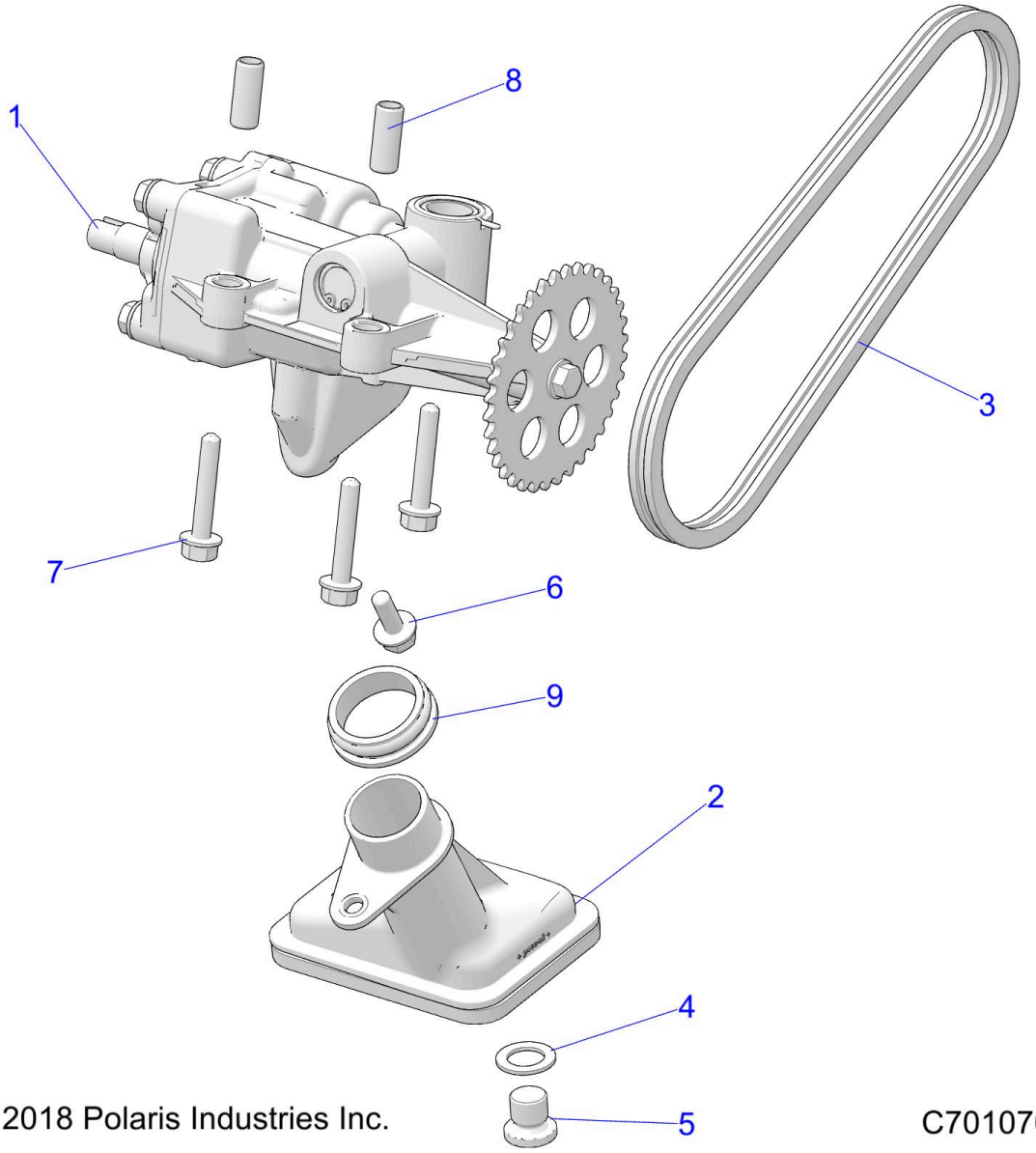

© 2018 Polaris Industries Inc.

C701070-4

Reference #	*Part#*	*Description*	*Quantity*
1	3023124	PUMP, OIL [INCL. O-RING]	1
1	3610269	O-RING,OIL PUMP	1
2	2521699	PICKUP, OIL PUMP, WET SUMP	1
3	3222191	CHAIN-OIL PUMP DRIVE,G-90	1
4	5812232	WASHER-19X12X1.3,COPPER	1
5	7052306	PLUG-SOCKET,M12X1.5 DIN 908A	1
6	7519236	SCR-HXFL-M6X1.0X16 8.8 ZYL NYL	1
7	7516827	SCR-M6X1.0X35,HX/FL-Y/D	3
8	7661975	DOWEL-HOLLOW,OIL PUMP	2
9	5415949	SEAL-PICKUP	1

Copyright 1996-2026 Polaris Industries U.S.A All rights reserved.