ENGINE, INTAKE MANIFOLD, THROTTLE BODY, FUEL RAIL - Z26NMY99A4/B4/A6/B6 (C702910)

2026 RZR - RZR XP S 4 1000 ULTIMATE (R01) - Z26NMY99A4/B4/A6/B6

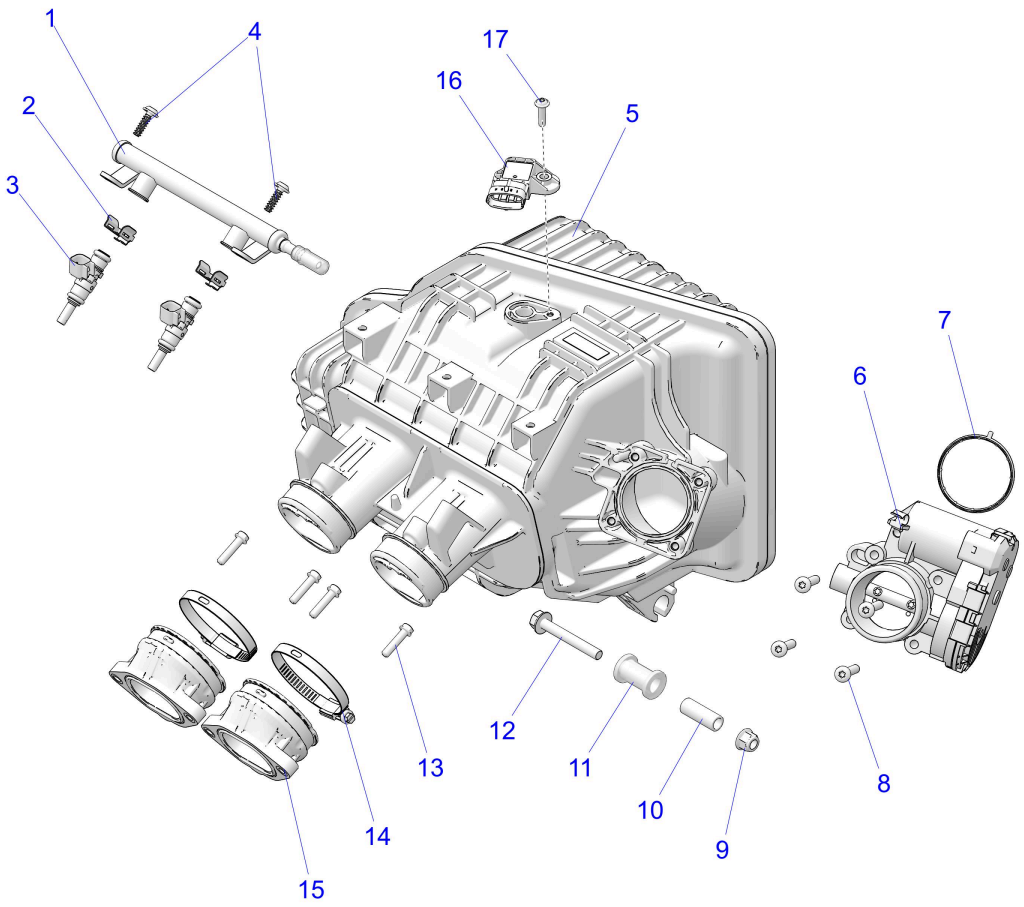

© 2021 Polaris Industries Inc.

C702910

Reference #	*Part#*	*Description*	*Quantity*
1	2522004	ASM-RAIL,FUEL,4BAR,NR	1
2	3131717	CLIP, INJECTOR	2
3	2521387	INJ., EV 14 COMP, EXT	2
4	1500198	O-RING-BOSCH,EV-14,UPPER, BLUE	2
4	5415066	O-RING GREEN, LOWER	2
4	7520922	SCR-TXWH-6MMX20MM DELTA PT CLR	2
5	3023683	MANIFOLD-INTAKE,COMPOSITE [A4/A6]	1
5	3023684	MANIFOLD-INTAKE COMPOS,EVAP [EVAP MODELS]	1
6	1204455	THROTTLE-ETC,46MM	1
7	5814769	GASKET-THROTTLE BODY	1

8	7518377	SCR-1/4X2 HI/LO-PH-PN TRX-M	4
9	7547332	NUT- M8X1.25, FLG, NYLOC-OLIVE D	1
10	5138678	LIMITER-COMPRESSION,AF.0113666	1
11	5813965	GROMMET-LX.0113665	1
12	7519298	SCR-HXFL-M8X1.25X60 8.8 ZOD	1
13	7519297	SCREW-HXFLG,M6X1.0X25,10.9	4
14	7083027	CLAMP-NARROW,SLOTTED 60-75MM	2
15	5418145	INTAKE-BOOT	2
16	2411528	SENSOR-TMAP DSS3-TF	1
17	7519952	SCREW-PLASTITE,5.0MMX20-PN-T25	1

Copyright 1996-2026 Polaris Industries U.S.A All rights reserved.