SUSPENSION, REAR CARRIER AND HUB - Z26NMY99A4/B4/A6/B6 (C750911)

2026 RZR - RZR XP S 4 1000 ULTIMATE (R01) - Z26NMY99A4/B4/A6/B6

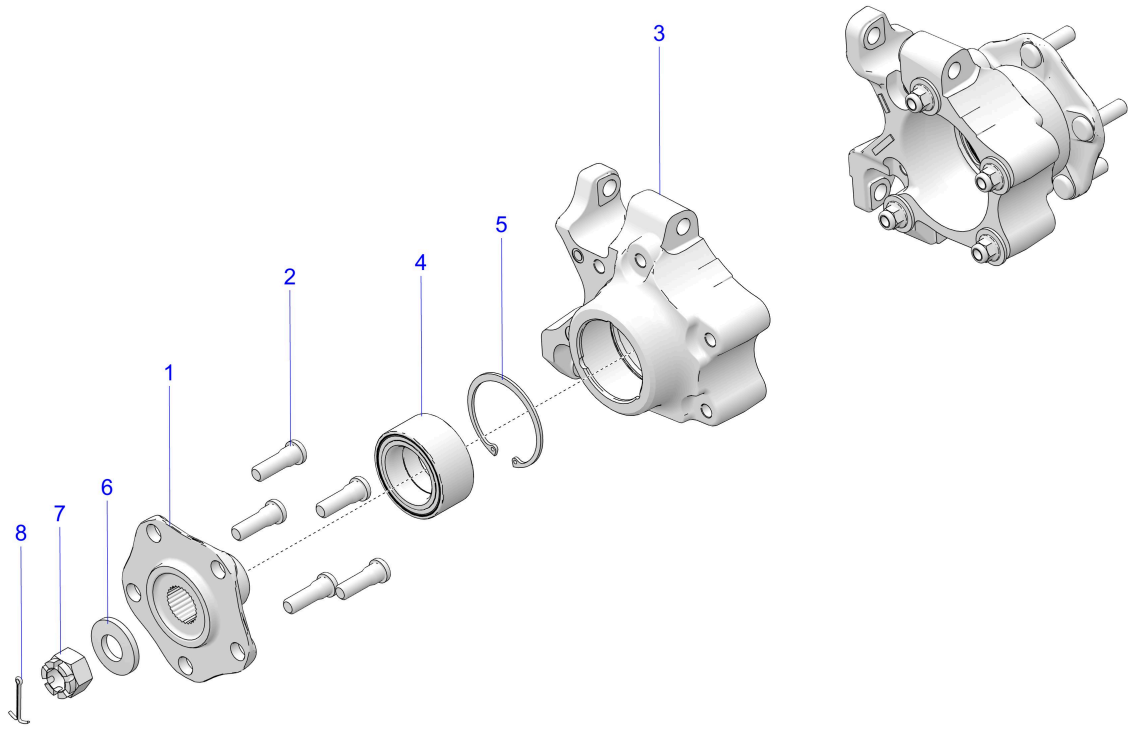

© 2025 Polaris Industries Inc.

C750911

Reference #	*Part#*	*Description*	*Quantity*
1	1525112	ASM-WHEEL HUB [INCLUDES 2]	2
1	5143999	HUB-WHEEL(MACH),28T [NO STUDS]	2
2	7519753	STUD-WHEEL,M12-1.5	10
3	1525677	ASM-CARRIER BEARING,RR,LH [INCLUDES 4 & 5]	1
3	5145231	CARRIER-BEARING,WHEEL,LH(MACH)	2
3	1525678	ASM-CARRIER BEARING,RR,RH [INCLUDES 4 & 5]	1
3	5145232	CARRIER-BEARING,WHEEL,RH(MACH)	1
4	3515824	BEARING-BALL,SEALED,44X72X33.1	2
5	7710780	RING-RETAINING,2.835,INTERNAL	2
6	7557146	WSHR-LOAD,21X45,5-5.6	2
7	7547949	NUT-CASTLE-M20X1.5 ZFS	2
8	7661404	PIN-COTTER 1/8X1 1/2-Y	2

Copyright 1996-2026 Polaris Industries U.S.A All rights reserved.