PROJECT REPORT

Firefighter Robot

The Next Step in Fire Control

Group members: Jaiminiben Vasava(U23AI066), Rushi M Chavda(I23MA004), Nishchal Gupta(I23MA009)

1. Introduction

1.1 Problem Statement

Manual firefighting exposes responders to extreme heat, toxic gases, and life-threatening structural collapse. Reaching narrow or hazardous zones is often impossible without risking human lives, and delays in detecting or controlling fire can cause catastrophic damage. There is a clear need for an intelligent, autonomous system that can detect, locate, and extinguish fire with minimal human intervention.

1.2 What is a Firefighter Robot?

A firefighter robot is an autonomous or remotely operated machine equipped with sensors and extinguishers that enters lethal, high-temperature environments to suppress fires and locate victims — eliminating the risk of injury to human firefighters from smoke, heat, and structural collapse. These robots are especially valuable in chemical plants, oil refineries, nuclear facilities, and any confined or collapsed structure where human access is dangerous or impossible.

1.3 Project Motivation

- High risk in manual firefighting — extreme heat, toxic gases, life-threatening conditions.
- Limited accessibility — narrow, hazardous, or collapsed areas are unreachable by personnel.
- Need for faster response — delays allow fire to spread and cause greater structural and human loss.
- Requirement for automation — an intelligent system that can detect and act independently.

2. Objectives

The main objective of this project is to develop an intelligent firefighter robot capable of detecting and extinguishing fire efficiently. The system focuses on improving safety by minimising human involvement in dangerous situations, while ensuring quick response, accurate targeting, and reliable performance through automation and control mechanisms.

Objective	Description
Fire Detection & Suppression	Design and develop a robot capable of detecting fire sources and automatically activating the extinguishing system.
Human Safety	Reduce risk to human firefighters by operating autonomously in hazardous environments.
Sensor-Based Detection	Implement IR, thermal, and smoke sensors for fast, accurate fire localisation.
Kinematic Nozzle Control	Achieve precise nozzle positioning using 2-DOF revolute-joint kinematics and forward kinematic equations.
Autonomous Operation	Enable fully automatic and DTMF remote operation for better efficiency and coverage.
Real-Time Monitoring	Provide continuous temperature, gas level, and live video feedback to the operator.

Table 1: Key project objectives

3. System Concept

The firefighter robot is designed around a sensor-driven and kinematic control system that enables accurate fire detection and targeted extinguishing. The robot operates with two degrees of freedom (2-DOF) using revolute joints, allowing the nozzle to rotate and cover a circular workspace. It follows a circular coordinate system to determine the direction in which the nozzle should be aimed.

Infrared and smoke sensors continuously monitor the surroundings to detect the presence and location of fire. This information is processed by the Arduino controller, which calculates the required angular movement using forward kinematics and positions the nozzle toward the fire source. Once aligned, the system automatically activates the pump to extinguish the fire.

The robot supports both autonomous sensor-driven operation and manual DTMF remote control, and can be mounted on fire trucks to enhance firefighting efficiency and safety.

4. Working Principle

Step	Function	Description
1	**Fire Detection**	Thermal and smoke sensors scan continuously for heat signatures and flame sources, transmitting real-time data to the controller.
2	**Path Planning**	The robot determines the shortest and safest route to the fire using pre-programmed logic or real-time mapping.
3	**Obstacle Avoidance**	Ultrasonic or IR sensors detect obstacles and adjust the robot's path to safely navigate toward the fire location.
4	**Navigation**	DC motors and a wheel/track mechanism move the robot autonomously or via DTMF remote command.
5	**Nozzle Aiming**	The 2-DOF revolute-joint arm calculates joint angles q1 and q2 using forward kinematics to align the nozzle with the fire source.
6	**Fire Suppression**	The motorised pump activates and dispenses water, foam, or CO2 through the servo-controlled nozzle to extinguish the fire.
7	**Status Feedback**	Temperature, gas levels, and live video are relayed back to the operator continuously throughout the operation.

Table 2: Sequential working principle of the firefighter robot

5. Hardware Architecture

5.1 System Block Diagram

The physical system is built around an Arduino (ATmega 328P) microcontroller as the central processing unit. Three sensors (Left, Right, Front) handle obstacle and fire detection. A servo motor controls nozzle aiming, a pump with tank provides suppression, and a dual-channel motor driver controls locomotion.

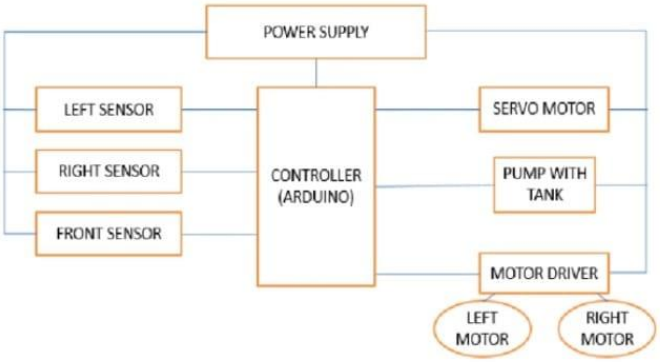

Figure 1: System-level hardware block diagram

5.2 Controller Signal Flow

DTMF signals received over the wireless module are decoded and forwarded to the ATmega 328P development board. The board routes movement commands to the Motor Driver Board (left and right DC motors) and suppression commands to the Pump Driver Board. This architecture supports both autonomous sensor-driven and remote DTMF-commanded operation simultaneously.

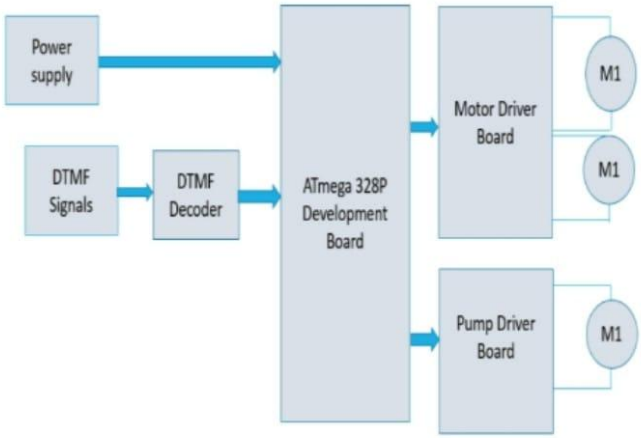

Figure 2: ATmega 328P signal-flow diagram — DTMF input to motor and pump drivers

6. Component Specification

Subsystem	Component	Specification / Role
Fire Detection	Flame Sensor (YG1006/R307)	IR module, detects 760–1100 nm wavelength
	Temperature Sensor (MLX90614)	Non-contact IR thermometer
	Smoke/Gas Sensor (MQ-2 / MQ-135)	Combustible gas and smoke detection
	Microcontroller (Arduino Uno / ESP32)	Data processing and decision logic
Fire Suppression	Water Pump (12V / 24V DC)	Submersible or diaphragm pump

Subsystem	Component	Specification / Role
	Motor Driver (L298N / Relay)	Pump and motor switching control
	Servo Motor (MG995 / SG90)	Nozzle rotation and precise aiming
	Nozzle Assembly	Mist/sprinkler head with flexible tubing
	Reservoir	Water tank or pressurised CO2 canister
Status Feedback	Wireless Module (HC-05 / ESP8266)	Bluetooth / Wi-Fi communications
	Camera Module (ESP32-CAM)	Live video streaming to operator
	Battery Monitor	Voltage divider and ADC for power level sensing
	Local Indicators	Piezo buzzer and RGB LED for status alerts

Table 3: Full component specification across all three subsystems

7. Kinematic Simulation (2-DOF Arm)

7.1 Role in the Firefighter Robot

The 2-DOF revolute-joint robotic arm serves as the nozzle-positioning mechanism of the firefighter robot. It enables the nozzle to sweep a circular workspace, calculated from joint angles q1 and q2, to aim accurately at a detected fire source. The Simscape Multibody simulation in MATLAB/Simulink validates the kinematic model prior to hardware implementation.

7.2 DOF2_Arm — Simscape Multibody Model

The DOF2_Arm.slx model implements the full rigid-body kinematic chain: World Frame → Base (fixed via Weld Joint) → Joint1 (Revolute) → Link1 → Joint2 (Revolute) → Link2 → End-Effector (fixed joint). Joint angle inputs q1 and q2 drive the joints in Computed Motion mode; measured outputs q1m and q2m are exported for post-processing. A Thermal Sensor subsystem monitors operating temperature along the arm structure.

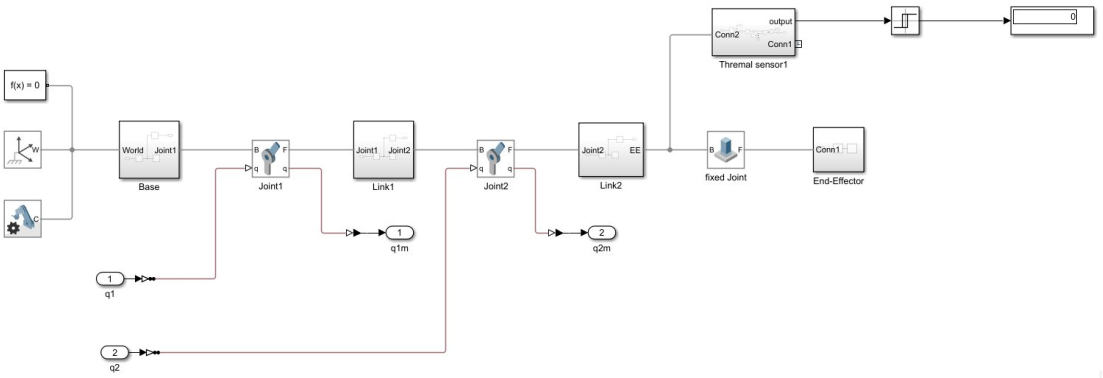

Figure 3: DOF2_Arm.slx — Simscape Multibody block diagram of the 2-DOF nozzle arm

7.3 Trajectory and Forward Kinematics Model

The auxiliary model (untitled.slx) wraps the DOF2_Arm as a subsystem and adds forward kinematics post-processing. Sinusoidal signals drive both joints to simulate the nozzle sweep. MATLAB's importrobot and getTransform functions compute the end-effector position (Body3 to Base transform), and a Coordinate Transformation Conversion block extracts the translation vector representing the nozzle tip position in 3D space.

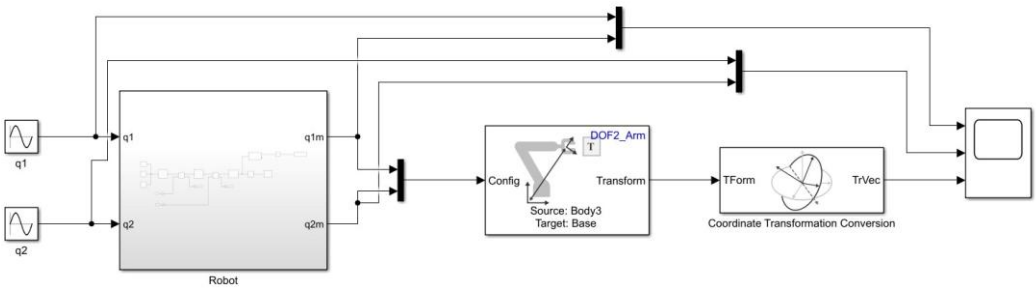

Figure 4: Main model — sinusoidal joint inputs and real-time end-effector trajectory tracking

7.4 Forward Kinematics Equations

The nozzle tip position in the XZ plane is described by the standard 2-DOF planar forward kinematics equations:

$$x = L_1 \cdot \cos(q_1) + L_2 \cdot \cos(q_1 + q_2)$$

$$z = L_1 \cdot \sin(q_1) + L_2 \cdot \sin(q_1 + q_2)$$

where L1 = 0.25 m (Link1), L2 = 0.20 m (Link2), and q1, q2 are the revolute joint angles. These equations allow the Arduino controller to calculate the required joint angles to aim the nozzle at any detected fire source within the maximum reachable workspace radius of 0.45 m.

7.5 Denavit-Hartenberg (DH) Parameters

Joint	Link Length	theta (joint angle)	d (offset)	alpha (twist)
1	L1 = 0.25 m	q1 (variable)	0	0 deg
2	L2 = 0.20 m	q2 (variable)	0	0 deg

Table 4: Denavit-Hartenberg parameters for the 2-DOF nozzle arm

8. Simulation Configuration

Parameter	Value
Simulation Duration	10.0 seconds
Solver Type	Variable-step (VariableStepAuto)
Sample Time (Ts)	0.001 s (1 kHz)
Simscape Relative Tolerance	0.001
Simscape Absolute Tolerance	0.001
Gravity Vector	[0, 0, -9.80665] m/s2 (Z-down)
Link1 Dimensions	0.25 m x 0.03 m x 0.03 m
Link2 Dimensions	0.20 m x 0.02 m x 0.02 m
Link Density	1000 kg/m3 (both links)
Max Workspace Radius	0.45 m
MATLAB Version	R2025b (v25.2.0.3177638)
Platform	Windows 64-bit

Table 5: Simulation solver and physical parameters

9. Advantages and Applications

9.1 Advantages

Advantage	Description
Improved Safety	Operates in extreme heat, dense smoke, and toxic gas conditions, eliminating direct risk to human firefighters.
High Efficiency	Rapid multi-sensor fire detection enables an immediate, targeted response before the fire spreads further.
Full Automation	Sensor-driven logic ensures reliable and consistent performance without requiring manual input during critical situations.
Real-Time Monitoring	Continuous temperature, gas level, and live video data keeps the operator fully informed throughout the operation.

Table 6: Summary of system advantages

9.2 Applications

- Fire Trucks — Mounted on fire trucks for remote-controlled suppression in dangerous zones without direct human entry.
- Industrial Areas — Chemical plants, oil refineries, and factories handling flammable or explosive materials.
- Buildings and Residential Areas — Confined or hard-to-reach spaces in homes, offices, and commercial buildings.
- Nuclear and Hazardous Facilities — Environments that are immediately lethal to unprotected personnel.

10. Future Scope and Conclusion

10.1 Future Scope

- Autonomous Navigation — Integration of SLAM-based path planning for fully independent movement in unknown environments.
- AI-Based Fire Detection — Computer vision and deep learning models for improved detection accuracy and classification.
- Enhanced Sensors — Advanced multi-spectral sensors for better characterisation of heat sources and hazardous gases.
- Improved Mobility — All-terrain wheel or track systems for rough terrain and collapsed-structure navigation.
- Advanced Suppression — Multi-agent foam and CO2 systems for larger or more complex fire scenarios.
- IoT Integration — Cloud-connected monitoring and fleet management for coordinated multi-robot deployment.

10.2 Conclusion

The Autonomous Firefighter Robot successfully integrates sensor-based fire detection, kinematic nozzle control, and automated suppression into a single coherent system. The 2-DOF Simscape Multibody simulation validates the forward kinematic model for nozzle positioning, confirming a 0.45 m workspace coverage radius with accurate joint-angle targeting under realistic physical conditions.

By combining robotics, embedded systems (ATmega 328P), and MATLAB/Simulink modelling, the project demonstrates how technology can substantially enhance safety, efficiency, and reliability in fire emergency response — reducing human exposure while improving both response time and suppression coverage.