LTSpice SImulations and schematics:

Aside from the integrator and differentiator, DC operating point simulation has been run and the results are displayed with the schematics itself.

1) addition

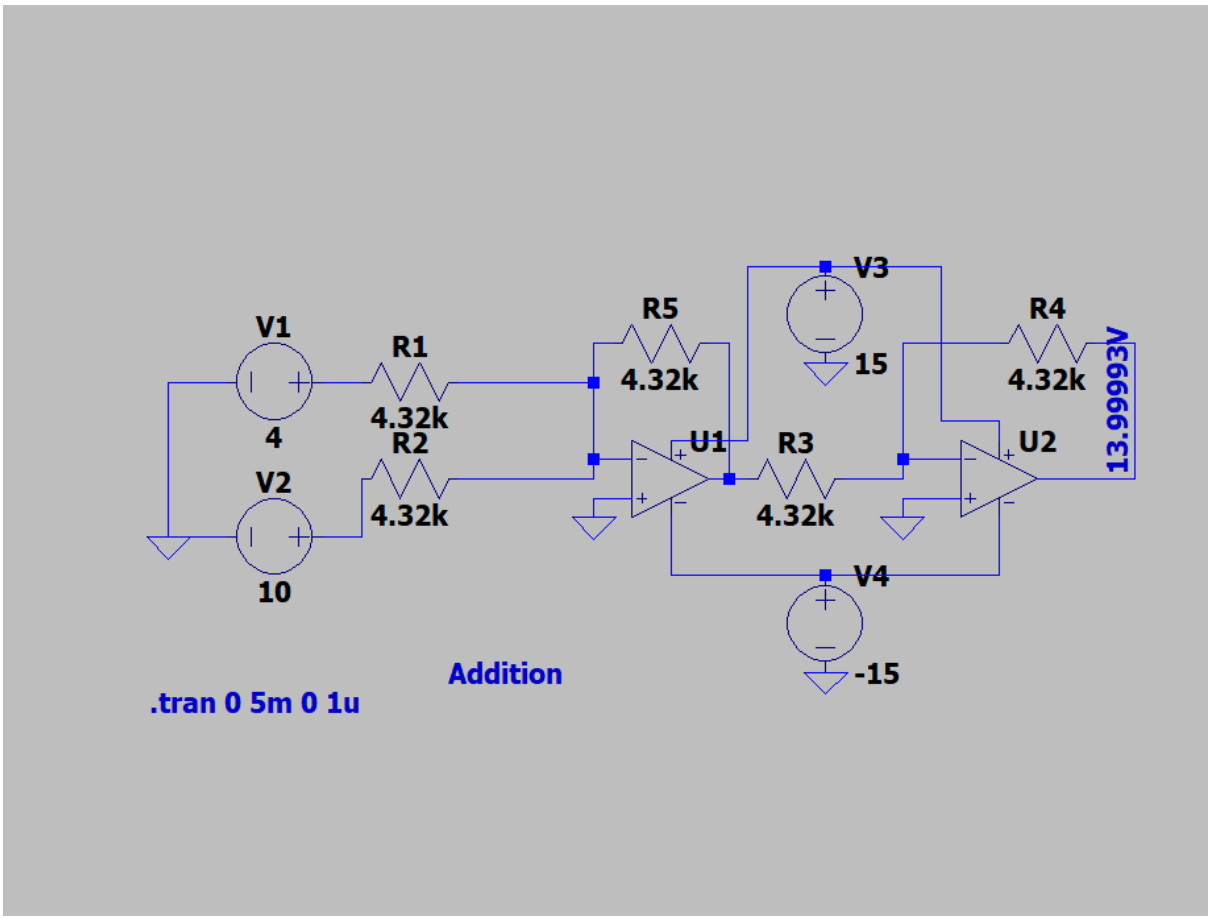

2) subtraction

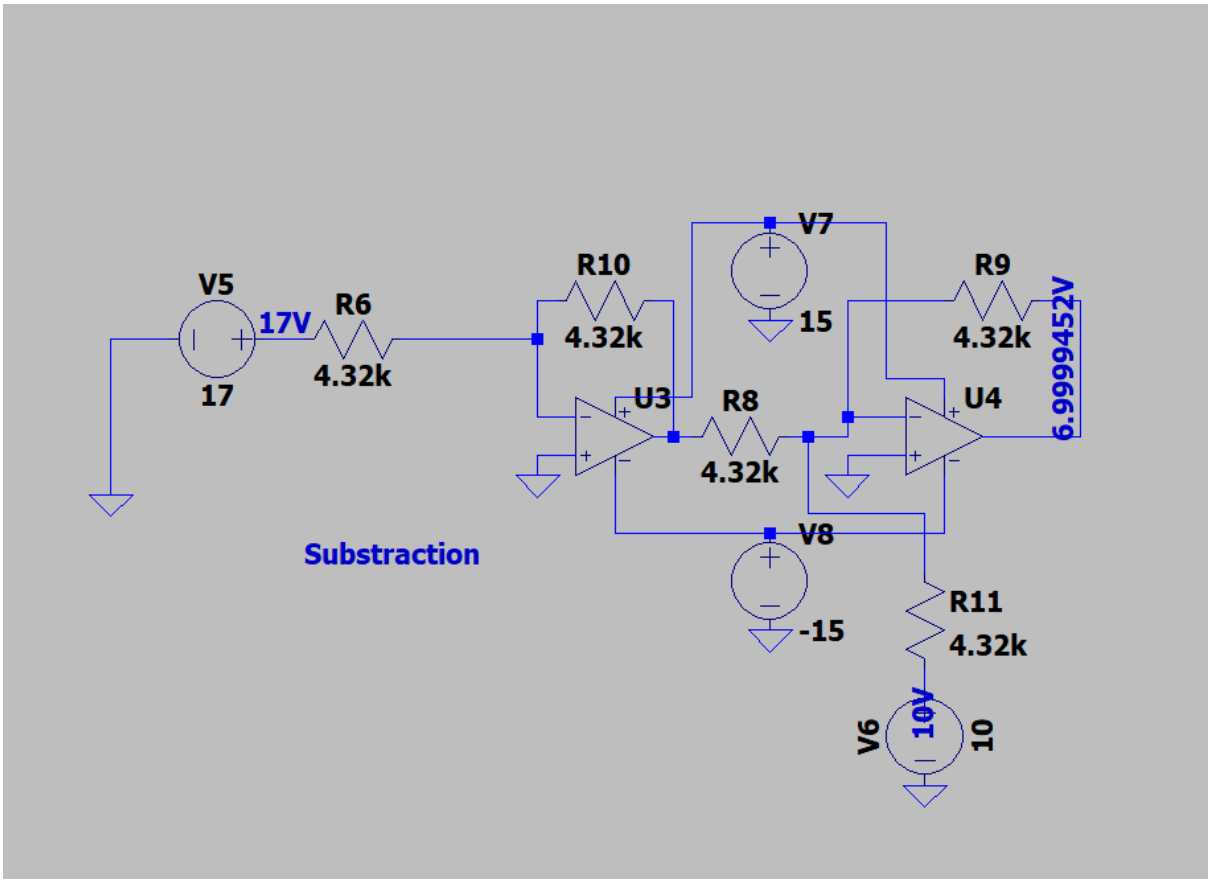

3)Antilog

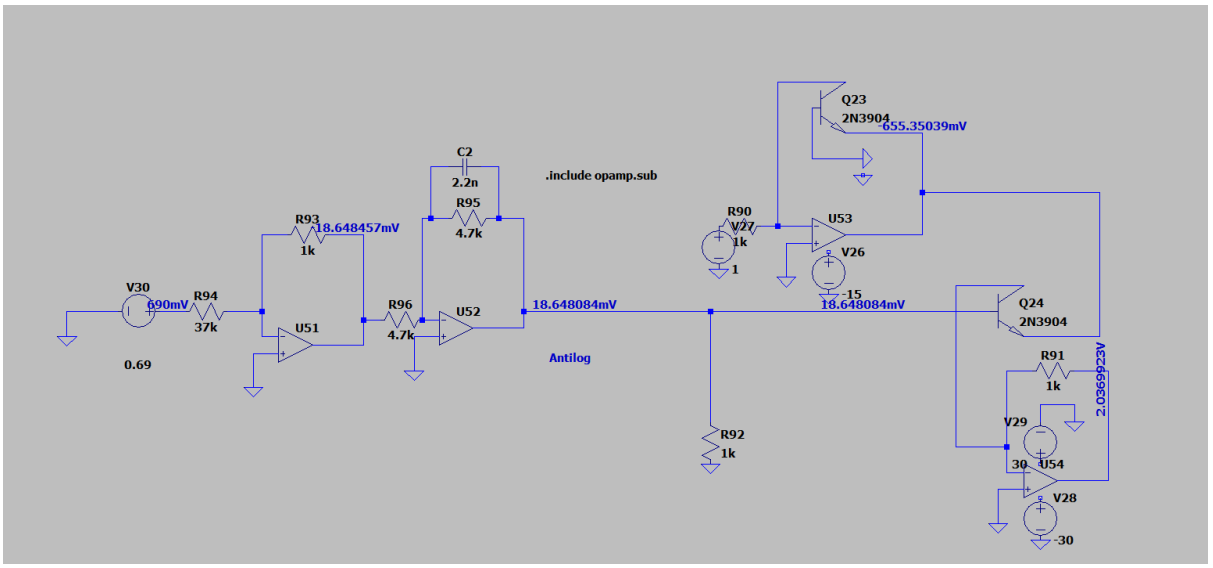

4) Logrithmic

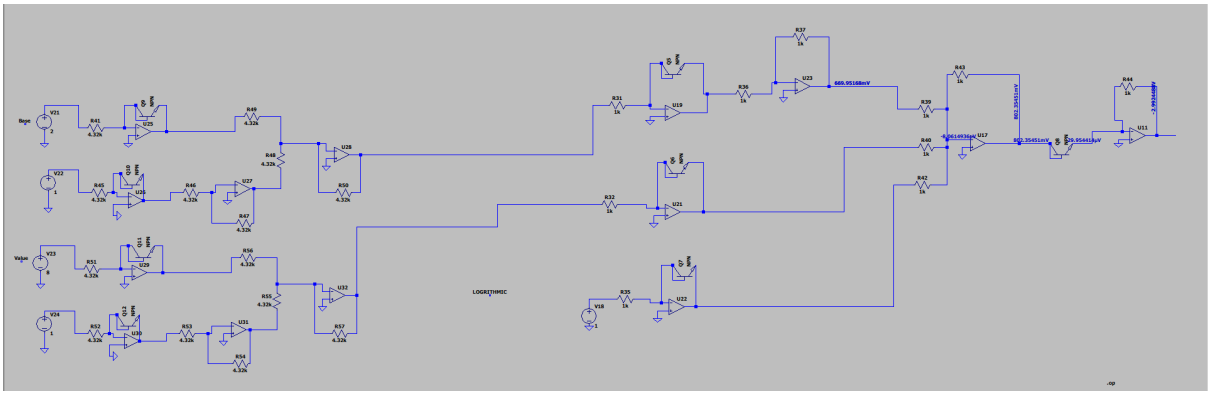

5) Division

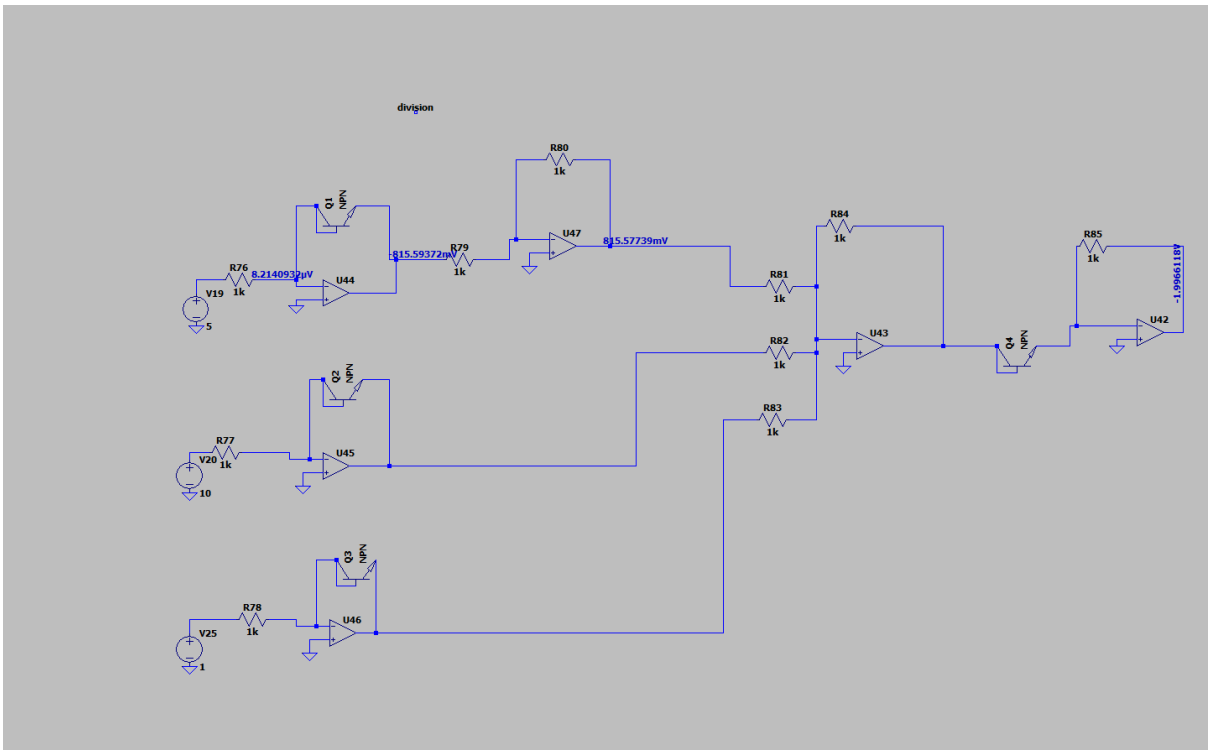

6) Multiplication

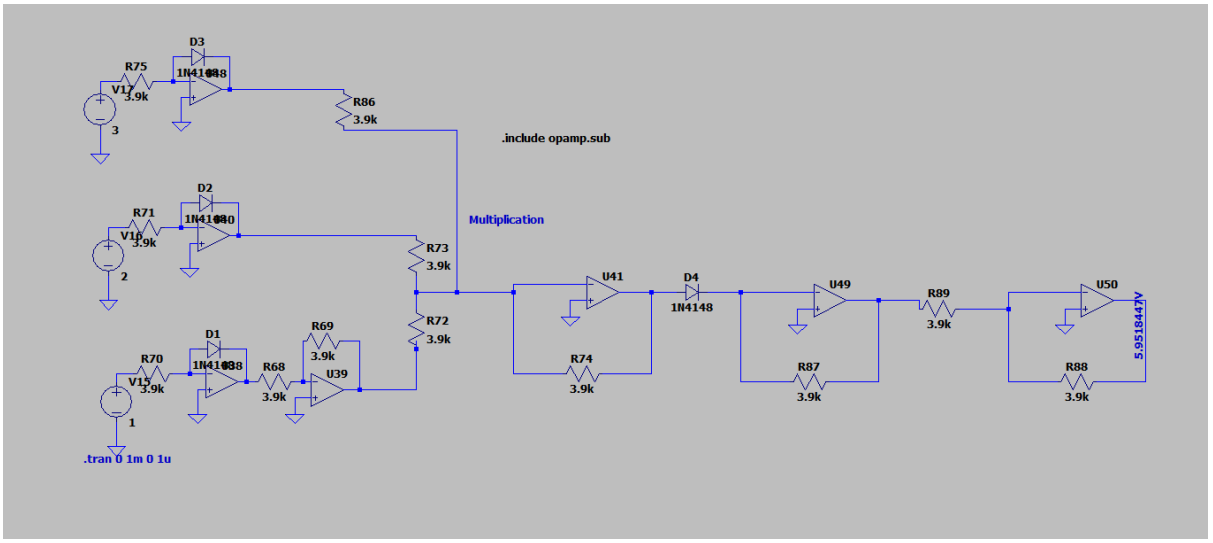

7) Square

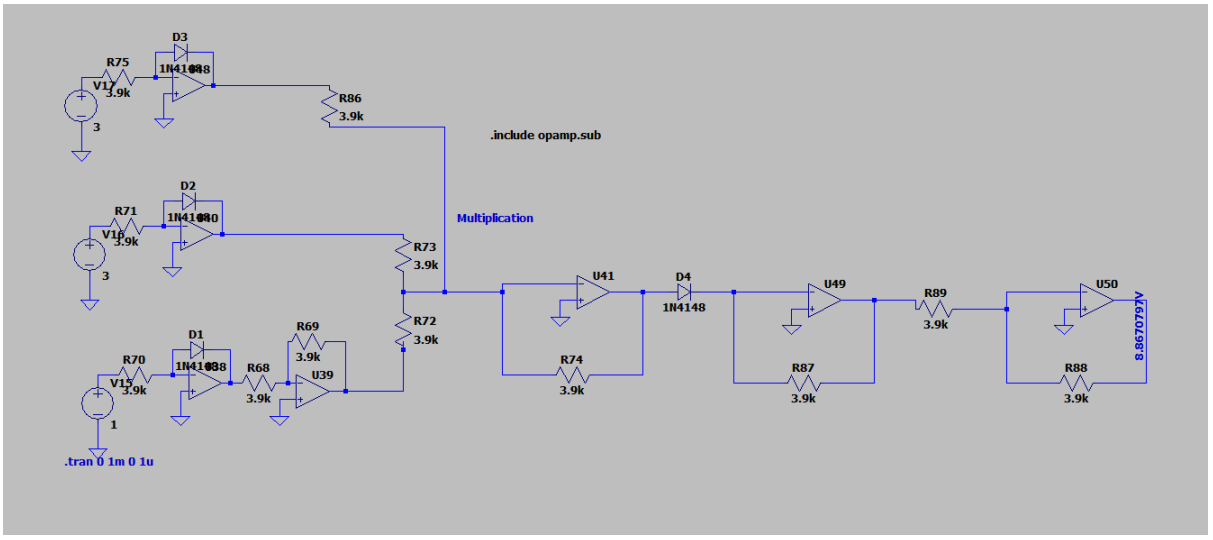

8) Square root

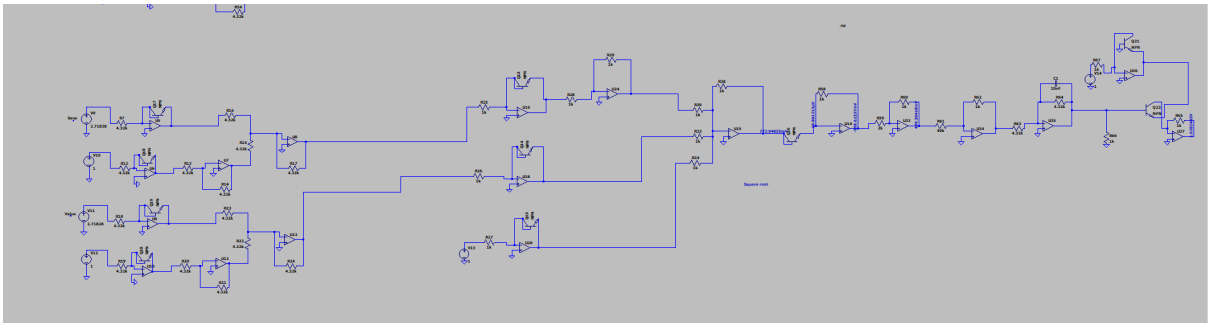

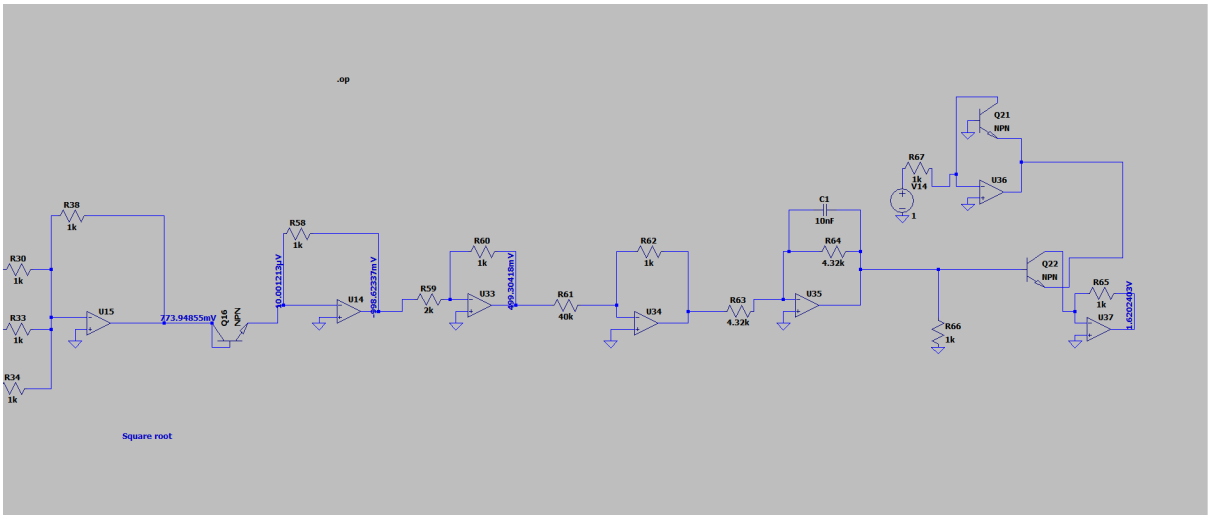

9) Differentiator

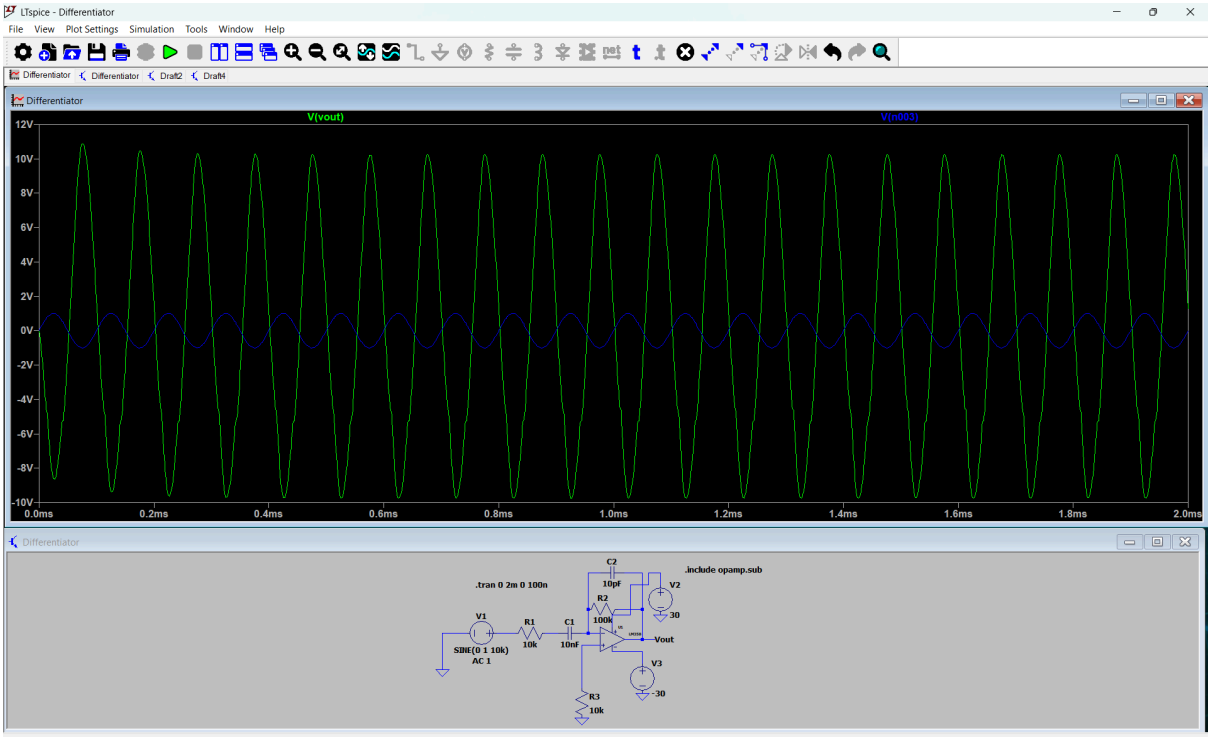

10) Integrator

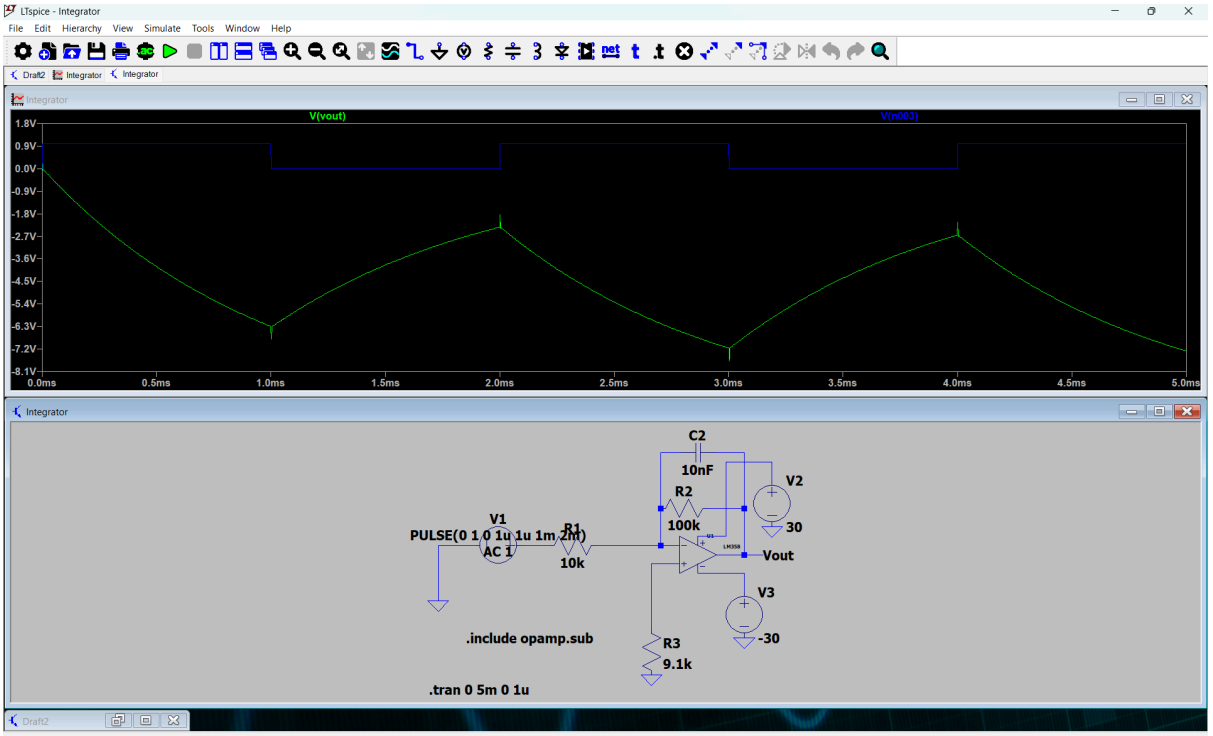

KICad Schematics and ERC:

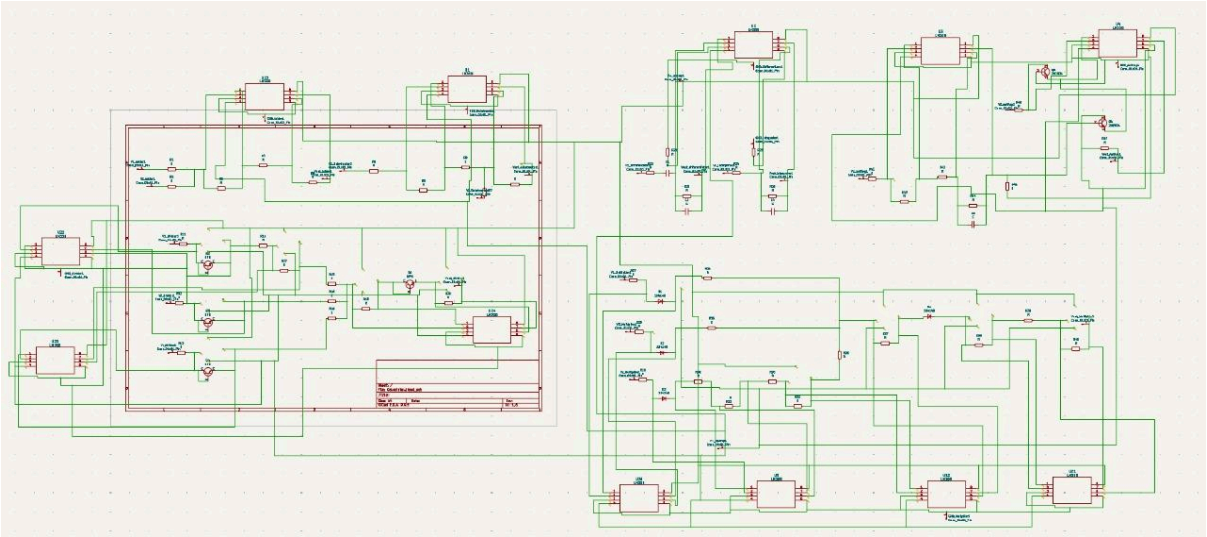

ERC:

Electrical Rules Checker

Violations (123) Ignored Tests (4)

- **Warning: Pins of type Unspecified and Passive are connected**
  - Symbol U26 Pin 6 [Unspecified, Line]
  - Symbol D2 Pin 2 [A, Passive, Line]
- **Warning: Pins of type Unspecified and Passive are connected**
  - Symbol U26 Pin 5 [Unspecified, Line]
  - Symbol GND_Muliplier1 Pin 1 [Pin_1, Passive, Line]
- **Warning: The current configuration does not include the footprint library 'Library'.**
  - Symbol U9 [LM358]
- **Warning: The current configuration does not include the symbol library 'LM358'**
  - Symbol U9 [LM358]
- **Warning: Pins of type Unspecified and Passive are connected**
  - Symbol U9 Pin 1 [Unspecified, Line]
  - Symbol D3 Pin 1 [K, Passive, Line]
- **Warning: Pins of type Unspecified and Passive are connected**
  - Symbol U9 Pin 2 [Unspecified, Line]
  - Symbol D3 Pin 2 [A, Passive, Line]
- **Warning: Pins of type Unspecified and Unspecified are connected**
  - Symbol U9 Pin 3 [Unspecified, Line]
  - Symbol U9 Pin 5 [Unspecified, Line]
- **Warning: Pins of type Unspecified and Passive are connected**
  - Symbol U9 Pin 4 [Unspecified, Line]
  - Symbol V-_Opamp1 Pin 1 [Pin_1, Passive, Line]
- **Warning: Pins of type Unspecified and Passive are connected**
  - Symbol U9 Pin 8 [Unspecified, Line]
  - Symbol R33 Pin 1 [Passive, Line]
- **Warning: Pins of type Unspecified and Unspecified are connected**
  - Symbol U9 Pin 7 [Unspecified, Line]
  - Symbol U9 Pin 8 [Unspecified, Line]
- **Warning: Pins of type Unspecified and Passive are connected**
  - Symbol U9 Pin 6 [Unspecified, Line]
  - Symbol R33 Pin 2 [Passive, Line]
- **Warning: Pins of type Unspecified and Unspecified are connected**
  - Symbol U9 Pin 5 [Unspecified, Line]
  - Symbol U12 Pin 3 [Unspecified, Line]

Show: All Errors 0 Warnings 123 Exclusions Save...

Delete Marker Delete All Markers Run ERC Close

Electrical Rules Checker

Violations (123) Ignored Tests (4)

Symbol U26 [LM358]

Warning: The current configuration does not include the symbol library 'LM358'

Symbol U26 [LM358]

Warning: Pins of type Unspecified and Passive are connected

Symbol U26 Pin 1 [Unspecified, Line]

Symbol D1 Pin 1 [K, Passive, Line]

Warning: Pins of type Unspecified and Passive are connected

Symbol U26 Pin 2 [Unspecified, Line]

Symbol D1 Pin 2 [A, Passive, Line]

Warning: Pins of type Unspecified and Unspecified are connected

Symbol U26 Pin 3 [Unspecified, Line]

Symbol U26 Pin 5 [Unspecified, Line]

Warning: Pins of type Unspecified and Passive are connected

Symbol U26 Pin 4 [Unspecified, Line]

Symbol V-_Opamp1 Pin 1 [Pin_1, Passive, Line]

Warning: Pins of type Unspecified and Passive are connected

Symbol U2 Pin 5 [Unspecified, Line]

Symbol R25 Pin 2 [Passive, Line]

Warning: Pins of type Unspecified and Passive are connected

Symbol U2 Pin 6 [Unspecified, Line]

Symbol R24 Pin 2 [Passive, Line]

Warning: Pins of type Unspecified and Passive are connected

Symbol U2 Pin 7 [Unspecified, Line]

Symbol Vout_integrator1 Pin 1 [Pin_1, Passive, Line]

Warning: Pins of type Unspecified and Passive are connected

Symbol U26 Pin 8 [Unspecified, Line]

Symbol R33 Pin 1 [Passive, Line]

Warning: Pins of type Unspecified and Passive are connected

Symbol U2 Pin 8 [Unspecified, Line]

Symbol V+_opamp1 Pin 1 [Pin_1, Passive, Line]

Warning: Pins of type Unspecified and Passive are connected

Symbol U26 Pin 7 [Unspecified, Line]

Symbol D2 Pin 1 [K, Passive, Line]

Warning: Pins of type Unspecified and Passive are connected

Show: All Errors 0 Warnings 123 Exclusions Save...

Delete Marker Delete All Markers Run ERC Close

Electrical Rules Checker

Violations (123) Ignored Tests (4)

- Symbol U4 Pin 2 [Unspecified, Line]
- Symbol Q5 Pin 3 [C, Passive, Line]
- **Warning: The current configuration does not include the footprint library 'Library'.**
  - Symbol U4 [LM358]
- **Warning: The current configuration does not include the symbol library 'LM358'**
  - Symbol U4 [LM358]
- **Warning: Pins of type Unspecified and Passive are connected**
  - Symbol U4 Pin 1 [Unspecified, Line]
  - Symbol Q5 Pin 1 [E, Passive, Line]
- **Warning: Unconnected wire endpoint**
  - Vertical Wire, length 200 mils
- **Warning: The current configuration does not include the footprint library 'Library'.**
  - Symbol U21 [LM358]
- **Warning: The current configuration does not include the symbol library 'LM358'**
  - Symbol U21 [LM358]
- **Warning: Pins of type Unspecified and Passive are connected**
  - Symbol U21 Pin 1 [Unspecified, Line]
  - Symbol R38 Pin 2 [Passive, Line]
- **Warning: Pins of type Unspecified and Passive are connected**
  - Symbol U21 Pin 2 [Unspecified, Line]
  - Symbol R38 Pin 1 [Passive, Line]
- **Warning: Pins of type Unspecified and Unspecified are connected**
  - Symbol U21 Pin 3 [Unspecified, Line]
  - Symbol U21 Pin 5 [Unspecified, Line]
- **Warning: Pins of type Unspecified and Passive are connected**
  - Symbol U21 Pin 4 [Unspecified, Line]
  - Symbol V-_Opamp1 Pin 1 [Pin_1, Passive, Line]
- **Warning: Pins of type Unspecified and Passive are connected**
  - Symbol U4 Pin 5 [Unspecified, Line]
  - Symbol GND_Antilog1 Pin 1 [Pin_1, Passive, Line]
- **Warning: Pins of type Unspecified and Passive are connected**
  - Symbol U4 Pin 6 [Unspecified, Line]
  - Symbol Q6 Pin 3 [C, Passive, Line]
- **Warning: Pins of type Unspecified and Passive are connected**

Show: All Errors 0 Warnings 123 Exclusions Save...

Delete Marker Delete All Markers Run ERC Close

Electrical Rules Checker

Violations (123) Ignored Tests (4)

Warning: Pins of type Unspecified and Passive are connected
- Symbol U12 Pin 1 [Unspecified, Line]
- Symbol R32 Pin 2 [Passive, Line]

Warning: Pins of type Unspecified and Passive are connected
- Symbol U12 Pin 2 [Unspecified, Line]
- Symbol R32 Pin 1 [Passive, Line]

Warning: Pins of type Unspecified and Passive are connected
- Symbol U12 Pin 3 [Unspecified, Line]
- Symbol GND_Muliplier1 Pin 1 [Pin_1, Passive, Line]

Warning: Pins of type Unspecified and Unspecified are connected
- Symbol U12 Pin 4 [Unspecified, Line]
- Symbol U21 Pin 4 [Unspecified, Line]

Warning: Unconnected wire endpoint
- Horizontal Wire, length 50 mils

Warning: Pins of type Unspecified and Unspecified are connected
- Symbol U12 Pin 8 [Unspecified, Line]
- Symbol U21 Pin 8 [Unspecified, Line]

Warning: Pins of type Unspecified and Passive are connected
- Symbol U12 Pin 7 [Unspecified, Line]
- Symbol R37 Pin 2 [Passive, Line]

Warning: Pins of type Unspecified and Passive are connected
- Symbol U12 Pin 6 [Unspecified, Line]
- Symbol R37 Pin 1 [Passive, Line]

Warning: Pins of type Unspecified and Passive are connected
- Symbol U12 Pin 5 [Unspecified, Line]
- Symbol GND_Muliplier1 Pin 1 [Pin_1, Passive, Line]

Warning: Pins of type Unspecified and Unspecified are connected
- Symbol U4 Pin 4 [Unspecified, Line]
- Symbol U4 Pin 6 [Unspecified, Line]

Warning: Pins of type Unspecified and Passive are connected
- Symbol U4 Pin 3 [Unspecified, Line]
- Symbol GND_Antilog1 Pin 1 [Pin_1, Passive, Line]

Warning: Pins of type Unspecified and Passive are connected
- Symbol U4 Pin 2 [Unspecified, Line]

Show: All Errors 0 Warnings 123 Exclusions Save...

Delete Marker Delete All Markers Run ERC Close

Electrical Rules Checker

Violations (123) Ignored Tests (4)

- Symbol U12 Pin 3 [Unspecified, Line]
- **Warning: Pins of type Unspecified and Unspecified are connected**
  - Symbol U3 Pin 4 [Unspecified, Line]
  - Symbol U4 Pin 4 [Unspecified, Line]
- **Warning: Pins of type Unspecified and Unspecified are connected**
  - Symbol U3 Pin 3 [Unspecified, Line]
  - Symbol U3 Pin 5 [Unspecified, Line]
- **Warning: Pins of type Unspecified and Passive are connected**
  - Symbol U3 Pin 2 [Unspecified, Line]
  - Symbol R41 Pin 2 [Passive, Line]
- **Warning: The current configuration does not include the footprint library 'Library'.**
  - Symbol U3 [LM358]
- **Warning: The current configuration does not include the symbol library 'LM358'**
  - Symbol U3 [LM358]
- **Warning: Pins of type Unspecified and Passive are connected**
  - Symbol U3 Pin 1 [Unspecified, Line]
  - Symbol R43 Pin 1 [Passive, Line]
- **Warning: Pins of type Unspecified and Input are connected**
  - Symbol U3 Pin 5 [Unspecified, Line]
  - Symbol Q5 Pin 2 [B, Input, Line]
- **Warning: Pins of type Unspecified and Passive are connected**
  - Symbol U3 Pin 6 [Unspecified, Line]
  - Symbol R43 Pin 2 [Passive, Line]
- **Warning: Pins of type Unspecified and Passive are connected**
  - Symbol U3 Pin 7 [Unspecified, Line]
  - Symbol R45 Pin 1 [Passive, Line]
- **Warning: Pins of type Unspecified and Unspecified are connected**
  - Symbol U3 Pin 8 [Unspecified, Line]
  - Symbol U4 Pin 8 [Unspecified, Line]
- **Warning: The current configuration does not include the footprint library 'Library'.**
  - Symbol U12 [LM358]
- **Warning: The current configuration does not include the symbol library 'LM358'**
  - Symbol U12 [LM358]
- **Warning: Pins of type Unspecified and Passive are connected**

Show: All Errors 0 Warnings 123 Exclusions Save...

Delete Marker Delete All Markers Run ERC Close

Electrical Rules Checker

Violations (123) Ignored Tests (4)

Symbol R38 Pin 2 [Passive, Line]

Warning: Pins of type Unspecified and Passive are connected

Symbol U21 Pin 2 [Unspecified, Line]

Symbol R38 Pin 1 [Passive, Line]

Warning: Pins of type Unspecified and Unspecified are connected

Symbol U21 Pin 3 [Unspecified, Line]

Symbol U21 Pin 5 [Unspecified, Line]

Warning: Pins of type Unspecified and Passive are connected

Symbol U21 Pin 4 [Unspecified, Line]

Symbol V-_Opamp1 Pin 1 [Pin_1, Passive, Line]

Warning: Pins of type Unspecified and Passive are connected

Symbol U4 Pin 5 [Unspecified, Line]

Symbol GND_Antilog1 Pin 1 [Pin_1, Passive, Line]

Warning: Pins of type Unspecified and Passive are connected

Symbol U4 Pin 6 [Unspecified, Line]

Symbol Q6 Pin 3 [C, Passive, Line]

Warning: Pins of type Unspecified and Passive are connected

Symbol U4 Pin 7 [Unspecified, Line]

Symbol R47 Pin 2 [Passive, Line]

Warning: Pins of type Unspecified and Unspecified are connected

Symbol U4 Pin 8 [Unspecified, Line]

Symbol U21 Pin 8 [Unspecified, Line]

Warning: Pins of type Unspecified and Passive are connected

Symbol U21 Pin 8 [Unspecified, Line]

Symbol R31 Pin 1 [Passive, Line]

Warning: Pins of type Unspecified and Passive are connected

Symbol U21 Pin 7 [Unspecified, Line]

Symbol R40 Pin 2 [Passive, Line]

Warning: Pins of type Unspecified and Passive are connected

Symbol U21 Pin 6 [Unspecified, Line]

Symbol R40 Pin 1 [Passive, Line]

Warning: Pins of type Unspecified and Passive are connected

Symbol U21 Pin 5 [Unspecified, Line]

Symbol GND_Muliplier1 Pin 1 [Pin_1, Passive, Line]

Show: All Errors 0 Warnings 123 Exclusions Save...

Delete Marker Delete All Markers Run ERC Close

Electrical Rules Checker

Violations (123) Ignored Tests (4)

- **Warning: Pins of type Unspecified and Passive are connected**
  - Symbol U25 Pin 4 [Unspecified, Line]
  - Symbol R9 Pin 2 [Passive, Line]
- **Warning: Pins of type Unspecified and Passive are connected**
  - Symbol U25 Pin 3 [Unspecified, Line]
  - Symbol GND_Adder1 Pin 1 [Pin_1, Passive, Line]
- **Warning: Pins of type Unspecified and Passive are connected**
  - Symbol U25 Pin 2 [Unspecified, Line]
  - Symbol R1 Pin 2 [Passive, Line]
- **Warning: The current configuration does not include the footprint library 'Library'.**
  - Symbol U25 [LM358]
- **Warning: The current configuration does not include the symbol library 'LM358'**
  - Symbol U25 [LM358]
- **Warning: Pins of type Unspecified and Passive are connected**
  - Symbol U25 Pin 1 [Unspecified, Line]
  - Symbol R4 Pin 1 [Passive, Line]
- **Warning: Pins of type Unspecified and Unspecified are connected**
  - Symbol U22 Pin 8 [Unspecified, Line]
  - Symbol U23 Pin 8 [Unspecified, Line]
- **Warning: Pins of type Unspecified and Open emitter are connected**
  - Symbol U22 Pin 7 [Unspecified, Line]
  - Symbol Q3 Pin 3 [E, Open emitter, Line]
- **Warning: Pins of type Unspecified and Passive are connected**
  - Symbol U22 Pin 6 [Unspecified, Line]
  - Symbol GND_divider1 Pin 1 [Pin_1, Passive, Line]
- **Warning: Pins of type Unspecified and Unspecified are connected**
  - Symbol U22 Pin 5 [Unspecified, Line]
  - Symbol U22 Pin 6 [Unspecified, Line]
- **Warning: The current configuration does not include the footprint library 'Library'.**
  - Symbol U22 [LM358]
- **Warning: The current configuration does not include the symbol library 'LM358'**
  - Symbol U22 [LM358]
- **Warning: Pins of type Unspecified and Unspecified are connected**
  - Symbol U22 Pin 1 [Unspecified, Line]

Show: All Errors 0 Warnings 123 Exclusions Save...

Delete Marker Delete All Markers Run ERC Close

Electrical Rules Checker

Violations (123) Ignored Tests (4)

Symbol U24 Pin 5 [Unspecified, Line]

Warning: Pins of type Unspecified and Passive are connected

Symbol U24 Pin 4 [Unspecified, Line]

Symbol R7 Pin 1 [Passive, Line]

Warning: Pins of type Unspecified and Unspecified are connected

Symbol U24 Pin 8 [Unspecified, Line]

Symbol U26 Pin 8 [Unspecified, Line]

Warning: Pins of type Unspecified and Passive are connected

Symbol U24 Pin 7 [Unspecified, Line]

Symbol R20 Pin 2 [Passive, Line]

Warning: Pins of type Unspecified and Passive are connected

Symbol U24 Pin 6 [Unspecified, Line]

Symbol R20 Pin 1 [Passive, Line]

Warning: Pins of type Unspecified and Passive are connected

Symbol U24 Pin 5 [Unspecified, Line]

Symbol R14 Pin 1 [Passive, Line]

Warning: Pins of type Unspecified and Unspecified are connected

Symbol U2 Pin 4 [Unspecified, Line]

Symbol U3 Pin 4 [Unspecified, Line]

Warning: Pins of type Unspecified and Passive are connected

Symbol U2 Pin 3 [Unspecified, Line]

Symbol R23 Pin 2 [Passive, Line]

Warning: Pins of type Unspecified and Passive are connected

Symbol U2 Pin 2 [Unspecified, Line]

Symbol C1 Pin 2 [Passive, Line]

Warning: The current configuration does not include the footprint library 'Library'.

Symbol U2 [LM358]

Warning: The current configuration does not include the symbol library 'LM358'

Symbol U2 [LM358]

Warning: Pins of type Unspecified and Passive are connected

Symbol U2 Pin 1 [Unspecified, Line]

Symbol Vout_differentiator1 Pin 1 [Pin_1, Passive, Line]

Warning: The current configuration does not include the footprint library 'Library'.

Symbol U26 [LM358]

Show: All Errors 0 Warnings 123 Exclusions Save...

Delete Marker Delete All Markers Run ERC Close

Electrical Rules Checker

Violations (123) Ignored Tests (4)

- **Warning: The current configuration does not include the symbol library 'LM358'**
  - Symbol U22 [LM358]
- **Warning: Pins of type Unspecified and Unspecified are connected**
  - Symbol U22 Pin 1 [Unspecified, Line]
  - Symbol U22 Pin 3 [Unspecified, Line]
- **Warning: Pins of type Unspecified and Passive are connected**
  - Symbol U22 Pin 2 [Unspecified, Line]
  - Symbol R11 Pin 2 [Passive, Line]
- **Warning: Pins of type Unspecified and Passive are connected**
  - Symbol U22 Pin 3 [Unspecified, Line]
  - Symbol GND_divider1 Pin 1 [Pin_1, Passive, Line]
- **Warning: Pins of type Unspecified and Unspecified are connected**
  - Symbol U22 Pin 4 [Unspecified, Line]
  - Symbol U23 Pin 4 [Unspecified, Line]
- **Warning: Pins of type Unspecified and Passive are connected**
  - Symbol U25 Pin 5 [Unspecified, Line]
  - Symbol GND_Adder1 Pin 1 [Pin_1, Passive, Line]
- **Warning: Pins of type Unspecified and Passive are connected**
  - Symbol U25 Pin 6 [Unspecified, Line]
  - Symbol R4 Pin 2 [Passive, Line]
- **Warning: Pins of type Unspecified and Passive are connected**
  - Symbol U25 Pin 7 [Unspecified, Line]
  - Symbol R5 Pin 2 [Passive, Line]
- **Warning: Pins of type Unspecified and Passive are connected**
  - Symbol U25 Pin 8 [Unspecified, Line]
  - Symbol V+_opamp1 Pin 1 [Pin_1, Passive, Line]
- **Warning: Pins of type Unspecified and Unspecified are connected**
  - Symbol U23 Pin 8 [Unspecified, Line]
  - Symbol U25 Pin 8 [Unspecified, Line]
- **Warning: Pins of type Unspecified and Passive are connected**
  - Symbol U23 Pin 7 [Unspecified, Line]
  - Symbol R17 Pin 2 [Passive, Line]
- **Warning: Pins of type Unspecified and Passive are connected**
  - Symbol U23 Pin 6 [Unspecified, Line]

Show: All Errors 0 Warnings 123 Exclusions Save...

Delete Marker Delete All Markers Run ERC Close

Electrical Rules Checker

Violations (123) Ignored Tests (4)

- **Warning: The current configuration does not include the footprint library 'Library'.**
  - Symbol U1 [LM358]
- **Warning: The current configuration does not include the symbol library 'LM358'**
  - Symbol U1 [LM358]
- **Warning: Pins of type Unspecified and Passive are connected**
  - Symbol U1 Pin 1 [Unspecified, Line]
  - Symbol R9 Pin 1 [Passive, Line]
- **Warning: Pins of type Unspecified and Passive are connected**
  - Symbol U1 Pin 5 [Unspecified, Line]
  - Symbol GND_Substractor1 Pin 1 [Pin_1, Passive, Line]
- **Warning: Pins of type Unspecified and Passive are connected**
  - Symbol U1 Pin 6 [Unspecified, Line]
  - Symbol R9 Pin 2 [Passive, Line]
- **Warning: Pins of type Unspecified and Passive are connected**
  - Symbol U1 Pin 7 [Unspecified, Line]
  - Symbol Vout_substractor1 Pin 1 [Pin_1, Passive, Line]
- **Warning: Pins of type Unspecified and Passive are connected**
  - Symbol U1 Pin 8 [Unspecified, Line]
  - Symbol V+_opamp1 Pin 1 [Pin_1, Passive, Line]
- **Warning: Unconnected wire endpoint**
  - Vertical Wire, length 200 mils
- **Warning: The current configuration does not include the footprint library 'Library'.**
  - Symbol U24 [LM358]
- **Warning: The current configuration does not include the symbol library 'LM358'**
  - Symbol U24 [LM358]
- **Warning: Pins of type Unspecified and Input are connected**
  - Symbol U24 Pin 1 [Unspecified, Line]
  - Symbol Q1 Pin 2 [B, Input, Line]
- **Warning: Pins of type Unspecified and Passive are connected**
  - Symbol U24 Pin 2 [Unspecified, Line]
  - Symbol R19 Pin 1 [Passive, Line]
- **Warning: Pins of type Unspecified and Unspecified are connected**
  - Symbol U24 Pin 3 [Unspecified, Line]
  - Symbol U24 Pin 5 [Unspecified, Line]

Show: All Errors 0 Warnings 123 Exclusions Save...

Delete Marker Delete All Markers Run ERC Close

Electrical Rules Checker

Violations (123) Ignored Tests (4)

- Symbol U23 Pin 7 [Unspecified, Line]
- Symbol R17 Pin 2 [Passive, Line]

Warning: Pins of type Unspecified and Passive are connected

- Symbol U23 Pin 6 [Unspecified, Line]
- Symbol R17 Pin 1 [Passive, Line]

Warning: Pins of type Unspecified and Passive are connected

- Symbol U23 Pin 5 [Unspecified, Line]
- Symbol GND_divider1 Pin 1 [Pin_1, Passive, Line]

Warning: The current configuration does not include the footprint library 'Library'.

- Symbol U23 [LM358]

Warning: The current configuration does not include the symbol library 'LM358'

- Symbol U23 [LM358]

Warning: Pins of type Unspecified and Open emitter are connected

- Symbol U23 Pin 1 [Unspecified, Line]
- Symbol Q4 Pin 3 [E, Open emitter, Line]

Warning: Pins of type Unspecified and Passive are connected

- Symbol U23 Pin 2 [Unspecified, Line]
- Symbol R13 Pin 2 [Passive, Line]

Warning: Pins of type Unspecified and Unspecified are connected

- Symbol U23 Pin 3 [Unspecified, Line]
- Symbol U23 Pin 5 [Unspecified, Line]

Warning: Pins of type Unspecified and Unspecified are connected

- Symbol U23 Pin 4 [Unspecified, Line]
- Symbol U25 Pin 4 [Unspecified, Line]

Warning: Pins of type Unspecified and Unspecified are connected

- Symbol U1 Pin 4 [Unspecified, Line]
- Symbol U1 Pin 6 [Unspecified, Line]

Warning: Pins of type Unspecified and Passive are connected

- Symbol U1 Pin 3 [Unspecified, Line]
- Symbol GND_Substractor1 Pin 1 [Pin_1, Passive, Line]

Warning: Pins of type Unspecified and Passive are connected

- Symbol U1 Pin 2 [Unspecified, Line]
- Symbol R6 Pin 2 [Passive, Line]

Warning: The current configuration does not include the footprint library 'Library'.

Show: All Errors 0 Warnings 123 Exclusions Save...

Delete Marker Delete All Markers Run ERC Close

Footprints:

Assign Footprints

File Edit Preferences Help

Footprint Filters:

Footprint Libraries

```
Audio_Module
Battery
Button_Switch_Keyboard
Button_Switch_SMD
Button_Switch_THT
Buzzer_Beeper
Calibration_Scale
Capacitor_SMD
Capacitor_Tantalum_SMD
Capacitor_THT
Connector
Connector_AMASS
Connector_Amphenol
Connector_Audio
Connector_BarrelJack
Connector_Card
Connector_Coaxial
Connector_DIN
Connector_Dsub
Connector_FFC-FPC
Connector_Harting
Connector_Harwin
Connector_Hirose
Connector_Hirose_DF40
Connector_Hirose_FX8
Connector_IDC
Connector_JAE
Connector_JAE_WP7B
Connector_JST
Connector_Molex
Connector_Molex_Milligrid
Connector_PCBEdge
Connector_Phoenix_GMSTB
Connector_Phoenix_MC
Connector_Phoenix_MC_HighVoltage
Connector_Phoenix_MSTB
Connector_Phoenix_SPT
```

Symbol : Footprint Assignments

```
1   Adder1 -                LM358 : Library:LM358_DIP8_300
2 Antilog_1 -               LM358 : Library:LM358_DIP8_300
3 Antilog_2 -               LM358 : Library:LM358_DIP8_300
4 C1_diff1 -                    C : Capacitor_THT:C_Rect_L7.2mm_W2.5mm_P5.00mm_FKS2_FKP2_MKS2_MKP2
5       C2 -              C_diff : Capacitor_THT:C_Rect_L7.2mm_W2.5mm_P5.00mm_FKS2_FKP2_MKS2_MKP2
6 C3_antilog1 -                 C : Capacitor_THT:C_Rect_L7.2mm_W2.5mm_P5.00mm_FKS2_FKP2_MKS2_MKP2
7       C4 -              C_int : Capacitor_THT:C_Rect_L7.2mm_W2.5mm_P5.00mm_FKS2_FKP2_MKS2_MKP2
8 D1_multiplier1 -             1N4148 : Diode_THT:D_DO-35_SOD27_P7.62mm_Horizontal
9 D2_multiplier1 -             1N4148 : Diode_THT:D_DO-35_SOD27_P7.62mm_Horizontal
10 D3_multiplier1 -            1N4148 : Diode_THT:D_DO-35_SOD27_P7.62mm_Horizontal
11 D4_multiplier1 -            1N4148 : Diode_THT:D_DO-35_SOD27_P7.62mm_Horizontal
12 Differentiator_Integrator1 -                LM358 : Library:LM358_DIP8_300
13 Divider_1 -              LM358 : Library:LM358_DIP8_300
14 Divider_2 -              LM358 : Library:LM358_DIP8_300
15 Divider_3 -              LM358 : Library:LM358_DIP8_300
16 GND_Adder1 -   Conn_01x01_Pin : Connector_PinHeader_2.54mm:PinHeader_1x01_P2.54mm_Vertical
17 GND_Antilog1 -   Conn_01x01_Pin : Connector_PinHeader_2.54mm:PinHeader_1x01_P2.54mm_Vertical
18 GND_Differentiaor1 -   Conn_01x01_Pin : Connector_PinHeader_2.54mm:PinHeader_1x01_P2.54mm_Vertical
19 GND_divider1 -   Conn_01x01_Pin : Connector_PinHeader_2.54mm:PinHeader_1x01_P2.54mm_Vertical
20 GND_Integrator1 -   Conn_01x01_Pin : Connector_PinHeader_2.54mm:PinHeader_1x01_P2.54mm_Vertical
21 GND_Mulipliar1 -   Conn_01x01_Pin : Connector_PinHeader_2.54mm:PinHeader_1x01_P2.54mm_Vertical
22 GND_Substractor1 -   Conn_01x01_Pin : Connector_PinHeader_2.54mm:PinHeader_1x01_P2.54mm_Vertical
23 Multiplier_1 -           LM358 : Library:LM358_DIP8_300
24 Multiplier_2 -           LM358 : Library:LM358_DIP8_300
25 Multiplier_3 -           LM358 : Library:LM358_DIP8_300
26 Multiplier_4 -           LM358 : Library:LM358_DIP8_300
27 Q1_divider1 -             NPN : Package_TO_SOT_THT:TO-92_Inline
28 Q2_divider1 -             NPN : Package_TO_SOT_THT:TO-92_Inline
29 Q3_divider1 -             NPN : Package_TO_SOT_THT:TO-92_Inline
30 Q4_divider1 -             NPN : Package_TO_SOT_THT:TO-92_Inline
31 Q5_antilog1 -          2N3904 : Package_TO_SOT_THT:TO-92_Inline
32 Q6_antilog1 -          2N3904 : Package_TO_SOT_THT:TO-92_Inline
33 R1_adder1 -               R : Resistor_SMD:R_0805_2012Metric
34 R2_adder1 -               R : Resistor_SMD:R_0805_2012Metric
35 R3_adder1 -               R : Resistor_SMD:R_0805_2012Metric
36 R4_adder1 -               R : Resistor_SMD:R_0805_2012Metric
37 R5_adder1 -               R : Resistor_SMD:R_0805_2012Metric
38 R6_substractor1 -
```

Filtered Footprints

```
1 Audio_Module:Reverb_BTDR-1H
2 Audio_Module:Reverb_BTDR-1V
3 Battery:BatteryClip_Keystone_54_D16-19mm
4 Battery:BatteryHolder_Bulgin_BX0034_1xAAA
5 Battery:BatteryHolder_Bulgin_BX0036_1xC
6 Battery:BatteryHolder_Bulgin_BX0123_1xCR123
7 Battery:BatteryHolder_ComfortableElectronic_CH
8 Battery:BatteryHolder_Eagle_12BH611-GR
9 Battery:BatteryHolder_Keystone_103_1x20mm
10 Battery:BatteryHolder_Keystone_104_1x23mm
11 Battery:BatteryHolder_Keystone_105_1x2430
12 Battery:BatteryHolder_Keystone_106_1x20mm
13 Battery:BatteryHolder_Keystone_107_1x23mm
14 Battery:BatteryHolder_Keystone_500
15 Battery:BatteryHolder_Keystone_590
16 Battery:BatteryHolder_Keystone_1042_1x18650
17 Battery:BatteryHolder_Keystone_1057_1x2032
18 Battery:BatteryHolder_Keystone_1058_1x2032
19 Battery:BatteryHolder_Keystone_1060_1x2032
20 Battery:BatteryHolder_Keystone_2460_1xAA
21 Battery:BatteryHolder_Keystone_2462_2xAA
22 Battery:BatteryHolder_Keystone_2466_1xAAA
23 Battery:BatteryHolder_Keystone_2468_2xAAA
24 Battery:BatteryHolder_Keystone_2479_3xAAA
25 Battery:BatteryHolder_Keystone_2993
26 Battery:BatteryHolder_Keystone_2998_1x6.8mm
27 Battery:BatteryHolder_Keystone_3000_1x12mm
28 Battery:BatteryHolder_Keystone_3001_1x12mm
29 Battery:BatteryHolder_Keystone_3002_1x2032
30 Battery:BatteryHolder_Keystone_3008_1x2450
31 Battery:BatteryHolder_Keystone_3009_1x2450
32 Battery:BatteryHolder_Keystone_3034_1x20mm
33 Battery:BatteryHolder_LINX_BAT-HLD-012-SMT
34 Battery:BatteryHolder_MPD_BA9VPC_1xPP3
35 Battery:BatteryHolder_MPD_BC2AAPC_2xAA
36 Battery:BatteryHolder_MPD_BC12AAPC_2xAA
```

No Filtering: 15193 matching footprints

Library location: unknown

Apply, Save Schematic & Continue | OK | Cancel

28°C Mostly cloudy | Search | ENG IN | 16:23 01-11-2025

Assign Footprints

File Edit Preferences Help

Footprint Filters:

Footprint Libraries

```
Audio_Module
Battery
Button_Switch_Keyboard
Button_Switch_SMD
Button_Switch_THT
Buzzer_Beeper
Calibration_Scale
Capacitor_SMD
Capacitor_Tantalum_SMD
Capacitor_THT
Connector
Connector_AMASS
Connector_Amphenol
Connector_Audio
Connector_BarrelJack
Connector_Card
Connector_Coaxial
Connector_DIN
Connector_Dsub
Connector_FFC-FPC
Connector_Harting
Connector_Harwin
Connector_Hirose
Connector_Hirose_DF40
Connector_Hirose_FX8
Connector_IDC
Connector_JAE
Connector_JAE_WP7B
Connector_JST
Connector_Molex
Connector_Molex_Milligrid
Connector_PCBEdge
Connector_Phoenix_GMSTB
Connector_Phoenix_MC
Connector_Phoenix_MC_HighVoltage
Connector_Phoenix_MSTB
Connector_Phoenix_SPT
```

Symbol : Footprint Assignments

```
37 R5_adder1 -               R : Resistor_SMD:R_0805_2012Metric
38 R6_substractor1 -               R : Resistor_SMD:R_0805_2012Metric
39 R7_substractor1 -               R : Resistor_SMD:R_0805_2012Metric
40 R8_substractor1 -               R : Resistor_SMD:R_0805_2012Metric
41 R9_substractor1 -               R : Resistor_SMD:R_0805_2012Metric
42      R10 -                R : Resistor_SMD:R_0805_2012Metric
43 R11_divider1 -               R : Resistor_SMD:R_0805_2012Metric
44 R12_divider1 -               R : Resistor_SMD:R_0805_2012Metric
45 R13_divider1 -               R : Resistor_SMD:R_0805_2012Metric
46 R14_divider1 -               R : Resistor_SMD:R_0805_2012Metric
47 R15_divider1 -               R : Resistor_SMD:R_0805_2012Metric
48 R16_divider1 -               R : Resistor_SMD:R_0805_2012Metric
49 R17_divider1 -               R : Resistor_SMD:R_0805_2012Metric
50 R18_divider1 -               R : Resistor_SMD:R_0805_2012Metric
51 R19_divider1 -               R : Resistor_SMD:R_0805_2012Metric
52 R20_divider1 -               R : Resistor_SMD:R_0805_2012Metric
53 R21_diff1 -               R : Resistor_SMD:R_0805_2012Metric
54 R22_diff1 -               R : Resistor_SMD:R_0805_2012Metric
55 R23_diff1 -               R : Resistor_SMD:R_0805_2012Metric
56 R24_int1 -                R : Resistor_SMD:R_0805_2012Metric
57 R25_int1 -                R : Resistor_SMD:R_0805_2012Metric
58 R26_int1 -                R : Resistor_SMD:R_0805_2012Metric
59 R27_multiplier1 -               R : Resistor_SMD:R_0805_2012Metric
60 R28_multiplier1 -               R : Resistor_SMD:R_0805_2012Metric
61 R29_multiplier1 -               R : Resistor_SMD:R_0805_2012Metric
62 R30_multiplier1 -               R : Resistor_SMD:R_0805_2012Metric
63 R31_multiplier1 -               R : Resistor_SMD:R_0805_2012Metric
64 R32_multiplier1 -               R : Resistor_SMD:R_0805_2012Metric
65 R33_multiplier1 -               R : Resistor_SMD:R_0805_2012Metric
66 R34_multiplier1 -               R : Resistor_SMD:R_0805_2012Metric
67 R35_multiplier1 -               R : Resistor_SMD:R_0805_2012Metric
68 R36_multiplier1 -               R : Resistor_SMD:R_0805_2012Metric
69 R37_multiplier1 -               R : Resistor_SMD:R_0805_2012Metric
70 R38_multiplier1 -               R : Resistor_SMD:R_0805_2012Metric
71 R39_multiplier1 -               R : Resistor_SMD:R_0805_2012Metric
72 R40_multiplier1 -               R : Resistor_SMD:R_0805_2012Metric
73 R41_antilog1 -               R : Resistor_SMD:R_0805_2012Metric
74 R42_antilog1 -               R : Resistor_SMD:R_0805_2012Metric
```

Filtered Footprints

```
1 Audio_Module:Reverb_BTDR-1H
2 Audio_Module:Reverb_BTDR-1V
3 Battery:BatteryClip_Keystone_54_D16-19mm
4 Battery:BatteryHolder_Bulgin_BX0034_1xAAA
5 Battery:BatteryHolder_Bulgin_BX0036_1xC
6 Battery:BatteryHolder_Bulgin_BX0123_1xCR123
7 Battery:BatteryHolder_ComfortableElectronic_CH
8 Battery:BatteryHolder_Eagle_12BH611-GR
9 Battery:BatteryHolder_Keystone_103_1x20mm
10 Battery:BatteryHolder_Keystone_104_1x23mm
11 Battery:BatteryHolder_Keystone_105_1x2430
12 Battery:BatteryHolder_Keystone_106_1x20mm
13 Battery:BatteryHolder_Keystone_107_1x23mm
14 Battery:BatteryHolder_Keystone_500
15 Battery:BatteryHolder_Keystone_590
16 Battery:BatteryHolder_Keystone_1042_1x18650
17 Battery:BatteryHolder_Keystone_1057_1x2032
18 Battery:BatteryHolder_Keystone_1058_1x2032
19 Battery:BatteryHolder_Keystone_1060_1x2032
20 Battery:BatteryHolder_Keystone_2460_1xAA
21 Battery:BatteryHolder_Keystone_2462_2xAA
22 Battery:BatteryHolder_Keystone_2466_1xAAA
23 Battery:BatteryHolder_Keystone_2468_2xAAA
24 Battery:BatteryHolder_Keystone_2479_3xAAA
25 Battery:BatteryHolder_Keystone_2993
26 Battery:BatteryHolder_Keystone_2998_1x6.8mm
27 Battery:BatteryHolder_Keystone_3000_1x12mm
28 Battery:BatteryHolder_Keystone_3001_1x12mm
29 Battery:BatteryHolder_Keystone_3002_1x2032
30 Battery:BatteryHolder_Keystone_3008_1x2450
31 Battery:BatteryHolder_Keystone_3009_1x2450
32 Battery:BatteryHolder_Keystone_3034_1x20mm
33 Battery:BatteryHolder_LINX_BAT-HLD-012-SMT
34 Battery:BatteryHolder_MPD_BA9VPC_1xPP3
35 Battery:BatteryHolder_MPD_BC2AAPC_2xAA
36 Battery:BatteryHolder_MPD_BC12AAPC_2xAA
```

No Filtering: 15193 matching footprints

Library location: unknown

Apply, Save Schematic & Continue | OK | Cancel

28°C Mostly cloudy | Search | ENG IN | 16:24 01-11-2025

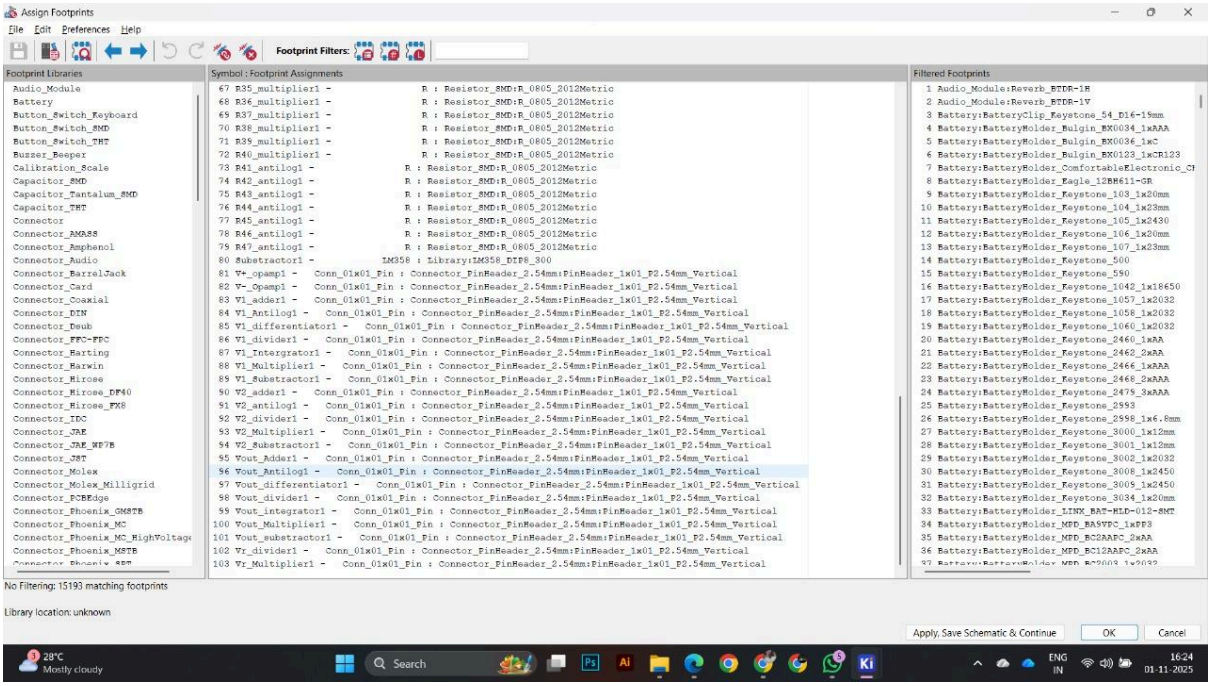
Assign Footprints
File Edit Preferences Help
Footprint Filters:
Footprint Libraries
Audio_Module
Battery
Button_Switch_Keyboard
Button_Switch_SMD
Button_Switch_THT
Buzzer_Beeper
Calibration_Scale
Capacitor_SMD
Capacitor_Tantalum_SMD
Capacitor_THT
Connector
Connector_AMASS
Connector_Amphenol
Connector_Audio
Connector_BarrelJack
Connector_Card
Connector_Coaxial
Connector_DIN
Connector_Dsub
Connector_FFC-FPC
Connector_Harting
Connector_Harwin
Connector_Hirose
Connector_Hirose_DF40
Connector_Hirose_FX8
Connector_IDC
Connector_JAE
Connector_JAE_MP7B
Connector_JST
Connector_Molex
Connector_Molex_Milligrid
Connector_PCBEdge
Connector_Phoenix_GMSTB
Connector_Phoenix_MC
Connector_Phoenix_MC_HighVoltage
Connector_Phoenix_MSTB
Symbol : Footprint Assignments
67 R35_multiplier1 - R : Resistor_SMD:R_0805_2012Metric
68 R36_multiplier1 - R : Resistor_SMD:R_0805_2012Metric
69 R37_multiplier1 - R : Resistor_SMD:R_0805_2012Metric
70 R38_multiplier1 - R : Resistor_SMD:R_0805_2012Metric
71 R39_multiplier1 - R : Resistor_SMD:R_0805_2012Metric
72 R40_multiplier1 - R : Resistor_SMD:R_0805_2012Metric
73 R41_antilog1 - R : Resistor_SMD:R_0805_2012Metric
74 R42_antilog1 - R : Resistor_SMD:R_0805_2012Metric
75 R43_antilog1 - R : Resistor_SMD:R_0805_2012Metric
76 R44_antilog1 - R : Resistor_SMD:R_0805_2012Metric
77 R45_antilog1 - R : Resistor_SMD:R_0805_2012Metric
78 R46_antilog1 - R : Resistor_SMD:R_0805_2012Metric
79 R47_antilog1 - R : Resistor_SMD:R_0805_2012Metric
80 Substractor1 - LM358 : Library:LM358_DIP8_300
81 V+_opamp1 - Conn_01x01_Pin : Connector_PinHeader_2.54mm:PinHeader_1x01_P2.54mm_Vertical
82 V-_Opamp1 - Conn_01x01_Pin : Connector_PinHeader_2.54mm:PinHeader_1x01_P2.54mm_Vertical
83 V1_adder1 - Conn_01x01_Pin : Connector_PinHeader_2.54mm:PinHeader_1x01_P2.54mm_Vertical
84 V1_Antilog1 - Conn_01x01_Pin : Connector_PinHeader_2.54mm:PinHeader_1x01_P2.54mm_Vertical
85 V1_differentiator1 - Conn_01x01_Pin : Connector_PinHeader_2.54mm:PinHeader_1x01_P2.54mm_Vertical
86 V1_divider1 - Conn_01x01_Pin : Connector_PinHeader_2.54mm:PinHeader_1x01_P2.54mm_Vertical
87 V1_Intergrator1 - Conn_01x01_Pin : Connector_PinHeader_2.54mm:PinHeader_1x01_P2.54mm_Vertical
88 V1_Multiplier1 - Conn_01x01_Pin : Connector_PinHeader_2.54mm:PinHeader_1x01_P2.54mm_Vertical
89 V1_Substractor1 - Conn_01x01_Pin : Connector_PinHeader_2.54mm:PinHeader_1x01_P2.54mm_Vertical
90 V2_adder1 - Conn_01x01_Pin : Connector_PinHeader_2.54mm:PinHeader_1x01_P2.54mm_Vertical
91 V2_antilog1 - Conn_01x01_Pin : Connector_PinHeader_2.54mm:PinHeader_1x01_P2.54mm_Vertical
92 V2_divider1 - Conn_01x01_Pin : Connector_PinHeader_2.54mm:PinHeader_1x01_P2.54mm_Vertical
93 V2_Multiplier1 - Conn_01x01_Pin : Connector_PinHeader_2.54mm:PinHeader_1x01_P2.54mm_Vertical
94 V2_Substractor1 - Conn_01x01_Pin : Connector_PinHeader_2.54mm:PinHeader_1x01_P2.54mm_Vertical
95 Vout_Adder1 - Conn_01x01_Pin : Connector_PinHeader_2.54mm:PinHeader_1x01_P2.54mm_Vertical
96 Vout_Antilog1 - Conn_01x01_Pin : Connector_PinHeader_2.54mm:PinHeader_1x01_P2.54mm_Vertical
97 Vout_differentiator1 - Conn_01x01_Pin : Connector_PinHeader_2.54mm:PinHeader_1x01_P2.54mm_Vertical
98 Vout_divider1 - Conn_01x01_Pin : Connector_PinHeader_2.54mm:PinHeader_1x01_P2.54mm_Vertical
99 Vout_integrator1 - Conn_01x01_Pin : Connector_PinHeader_2.54mm:PinHeader_1x01_P2.54mm_Vertical
100 Vout_Multiplier1 - Conn_01x01_Pin : Connector_PinHeader_2.54mm:PinHeader_1x01_P2.54mm_Vertical
101 Vout_substractor1 - Conn_01x01_Pin : Connector_PinHeader_2.54mm:PinHeader_1x01_P2.54mm_Vertical
102 Vr_divider1 - Conn_01x01_Pin : Connector_PinHeader_2.54mm:PinHeader_1x01_P2.54mm_Vertical
103 Vr_Multiplier1 - Conn_01x01_Pin : Connector_PinHeader_2.54mm:PinHeader_1x01_P2.54mm_Vertical
Filtered Footprints
1 Audio_Module:Reverb_BTDR-1H
2 Audio_Module:Reverb_BTDR-1V
3 Battery:BatteryClip_Keystone_54_D16-19mm
4 Battery:BatteryHolder_Bulgin_BX0036_1xAAA
5 Battery:BatteryHolder_Bulgin_BX0036_1xC
6 Battery:BatteryHolder_Bulgin_BX0123_1xCR123
7 Battery:BatteryHolder_ComfortableElectronic_CH
8 Battery:BatteryHolder_Eagle_12BH611-GR
9 Battery:BatteryHolder_Keystone_103_1x20mm
10 Battery:BatteryHolder_Keystone_104_1x23mm
11 Battery:BatteryHolder_Keystone_105_1x2430
12 Battery:BatteryHolder_Keystone_106_1x20mm
13 Battery:BatteryHolder_Keystone_107_1x23mm
14 Battery:BatteryHolder_Keystone_500
15 Battery:BatteryHolder_Keystone_590
16 Battery:BatteryHolder_Keystone_1042_1x18650
17 Battery:BatteryHolder_Keystone_1057_1x2032
18 Battery:BatteryHolder_Keystone_1058_1x2032
19 Battery:BatteryHolder_Keystone_1060_1x2032
20 Battery:BatteryHolder_Keystone_2460_1xAA
21 Battery:BatteryHolder_Keystone_2462_2xAA
22 Battery:BatteryHolder_Keystone_2466_1xAAA
23 Battery:BatteryHolder_Keystone_2468_2xAAA
24 Battery:BatteryHolder_Keystone_2479_3xAAA
25 Battery:BatteryHolder_Keystone_2993
26 Battery:BatteryHolder_Keystone_2998_1x6.8mm
27 Battery:BatteryHolder_Keystone_3000_1x12mm
28 Battery:BatteryHolder_Keystone_3001_1x12mm
29 Battery:BatteryHolder_Keystone_3002_1x2032
30 Battery:BatteryHolder_Keystone_3008_1x2450
31 Battery:BatteryHolder_Keystone_3009_1x2450
32 Battery:BatteryHolder_Keystone_3034_1x20mm
33 Battery:BatteryHolder_LINX_BAT-HLD-012-SMT
34 Battery:BatteryHolder_MPD_BA9VPC_1xPP3
35 Battery:BatteryHolder_MPD_BC2AAPC_2xAA
36 Battery:BatteryHolder_MPD_BC12AAPC_2xAA
No Filtering: 15193 matching footprints
Library location: unknown
Apply, Save Schematic & Continue
OK
Cancel
28°C
Mostly cloudy
Search
ENG
IN
16:24
01-11-2025

Layout:

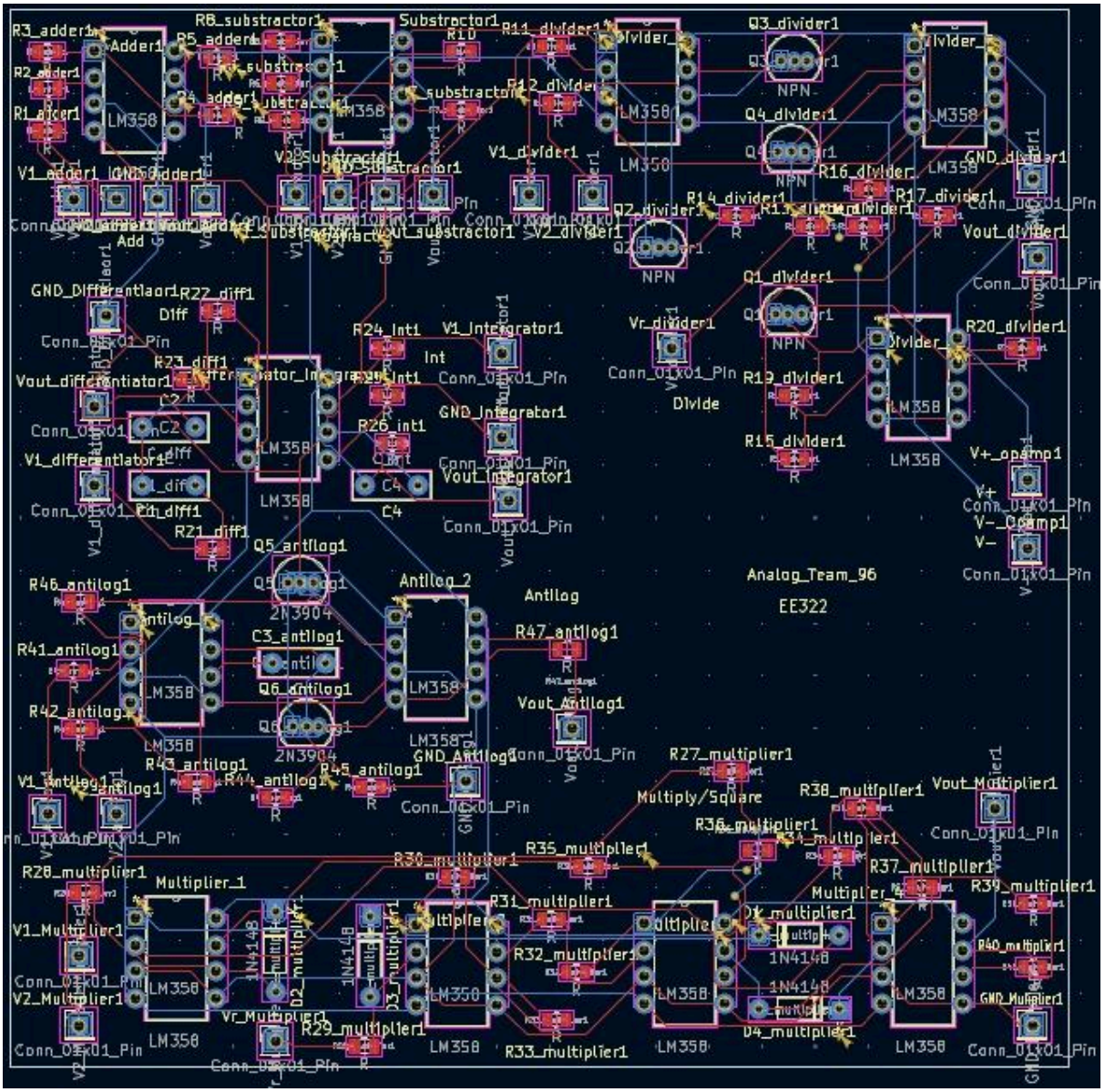
Analog_Team_96
EE322
Adder1
Substractor1
Divider
Antilog
Antilog_2
Multiplier_1
Multiply/Square
Divide
Diff
Int
LM358
2N3904
1N4148
NPN

Dimensions:

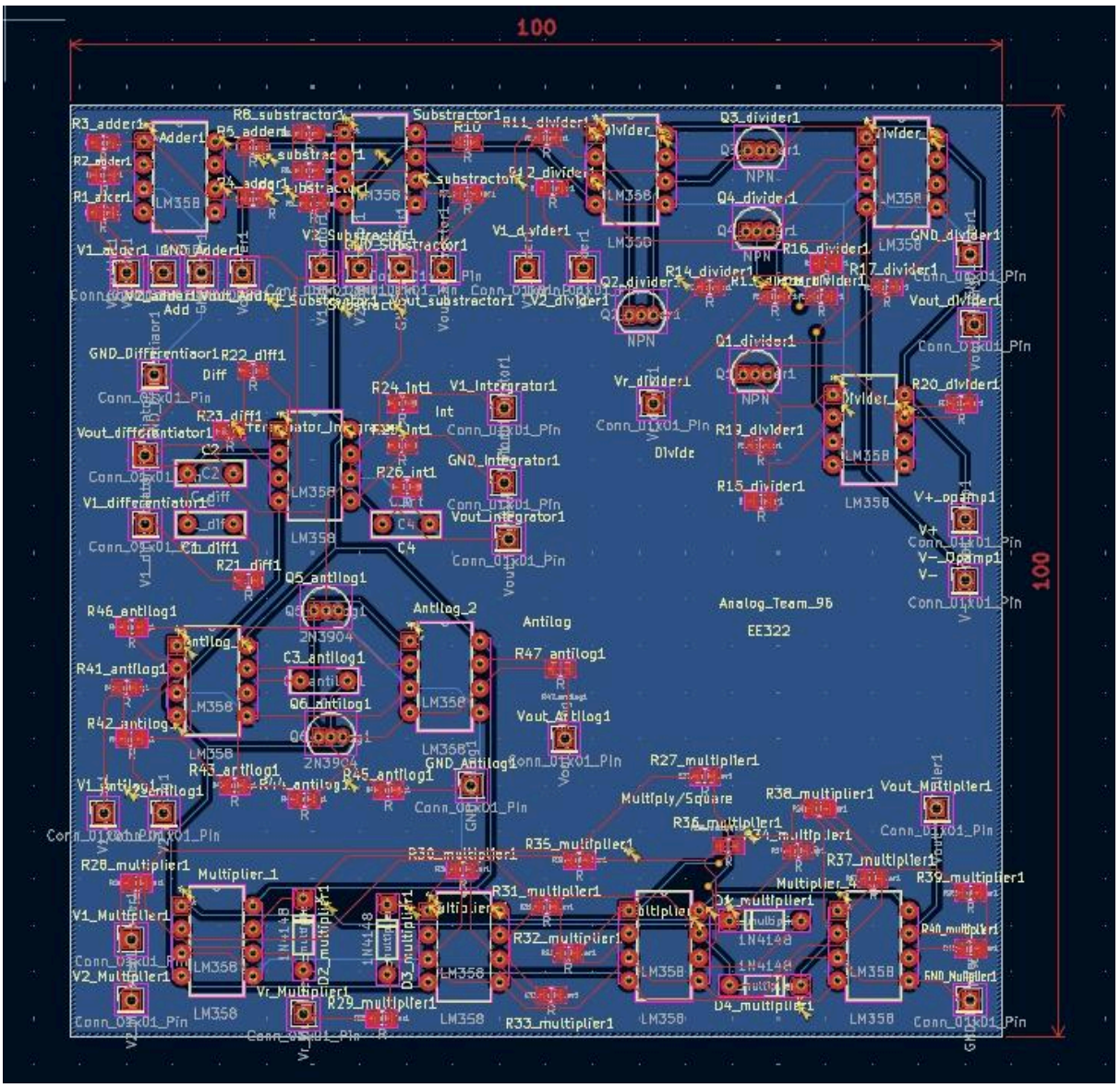
100
100
Analog_Team_96
EE322
Adder1
Substractor1
Divider
Antilog
Antilog_2
Multiplier_1
Multiplier_4
Multiply/Square
Diff
Int
Divide
LM358
NPN
2N3904
1N4148

Run DRC:

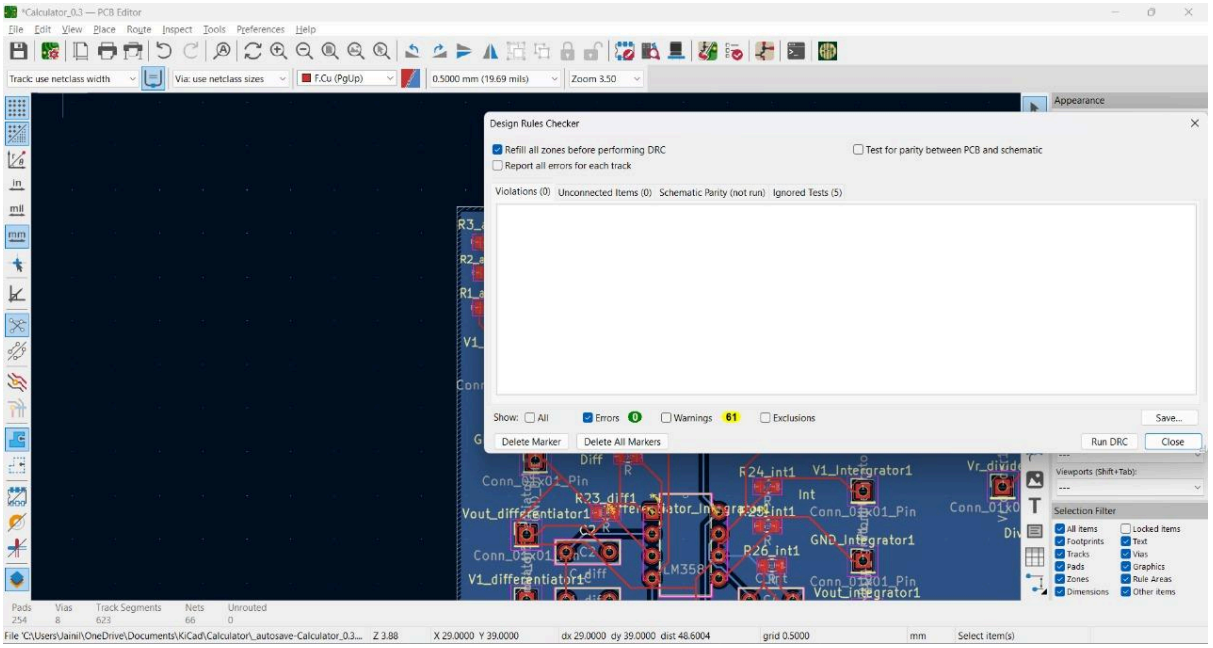

Final After Filling Zones:

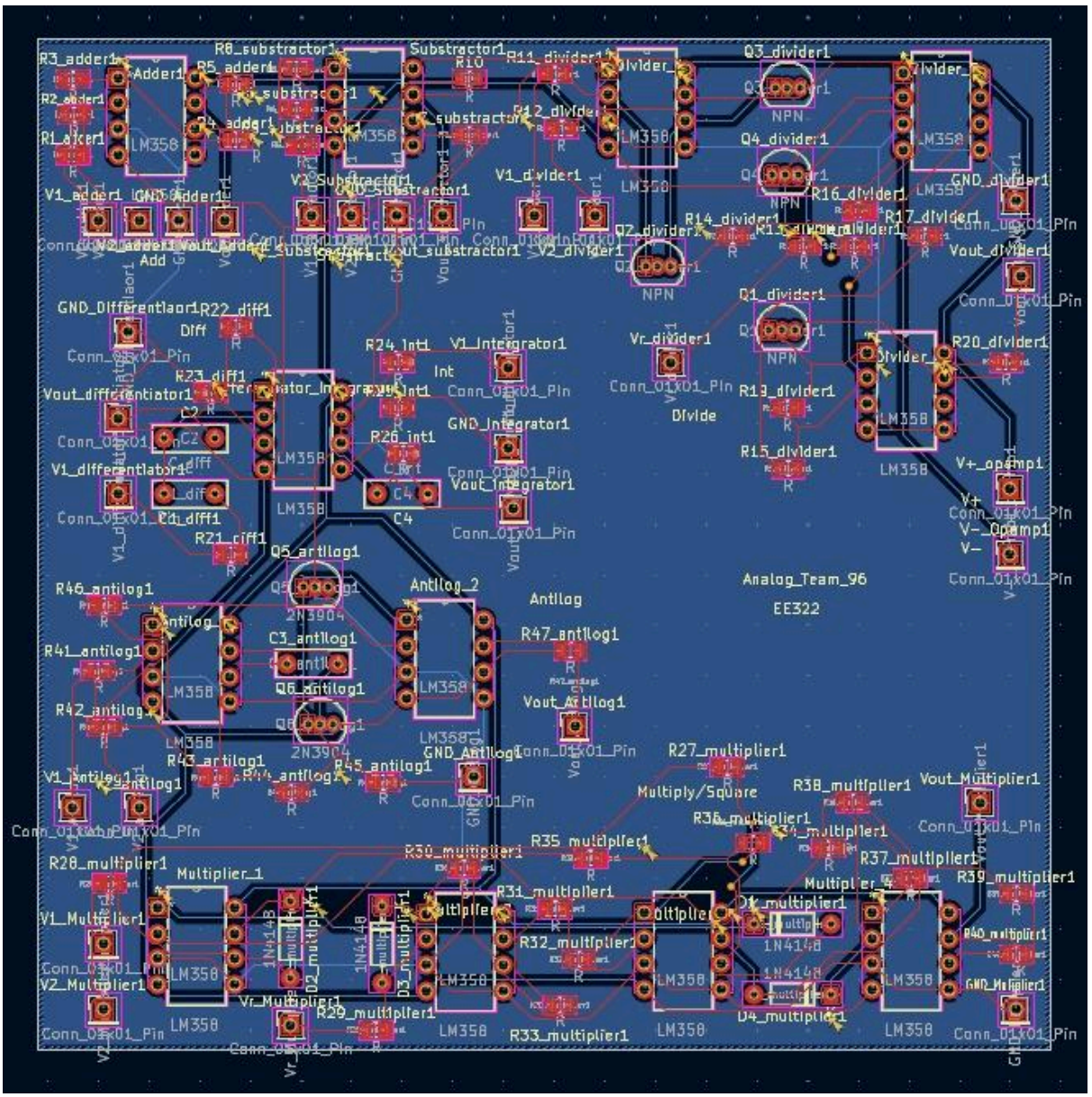
Analog_Team_96
EE322
Adder
Add
Diff
Int
Divide
Antilog
Multiply/Square
LM358
NPN
2N3904
1N4148

3D View:

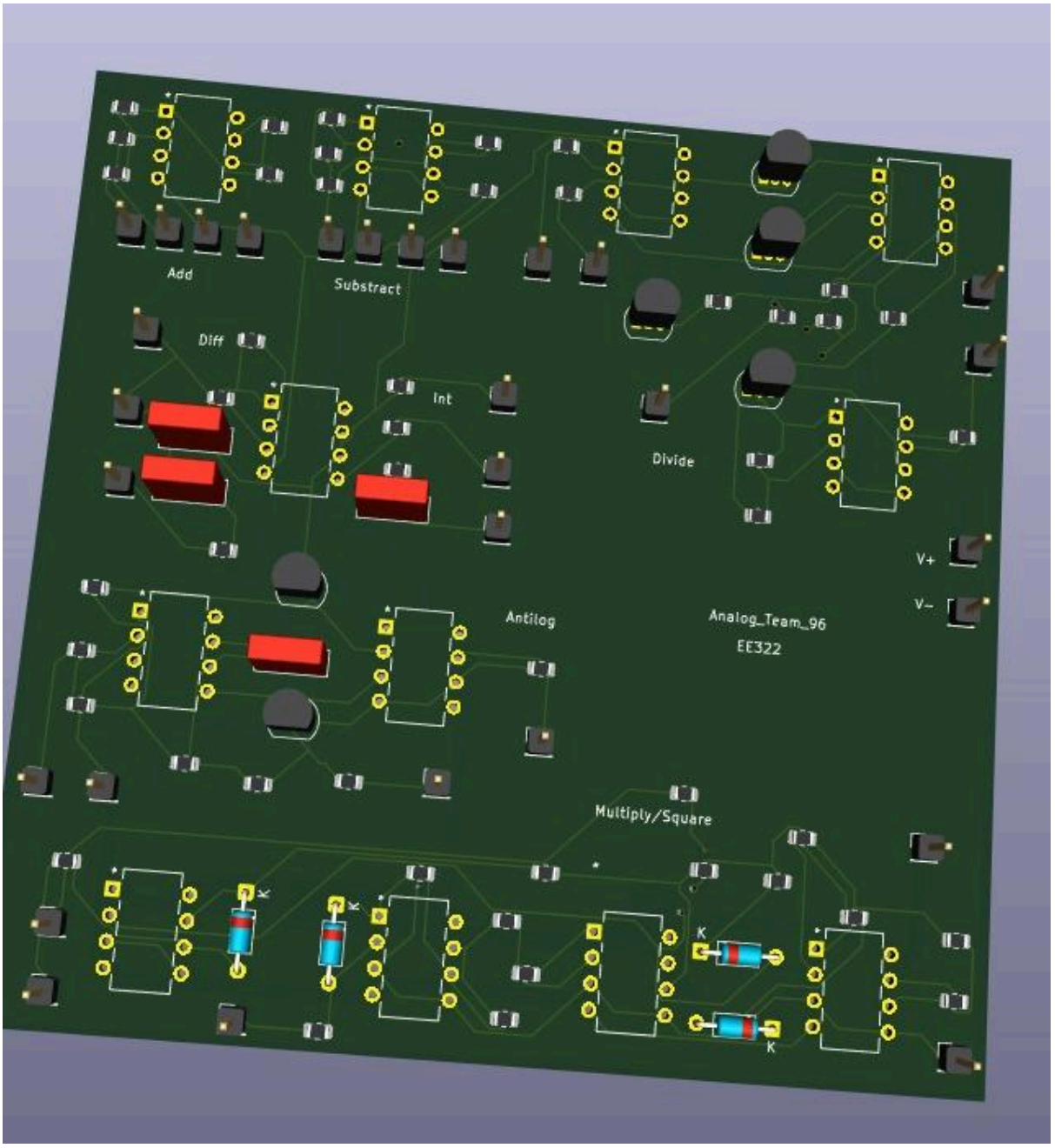
Add
Substract
Diff
Int
Divide
V+
V-
Antilog
Analog_Team_96
EE322
Multiply/Square
K
K
K
K

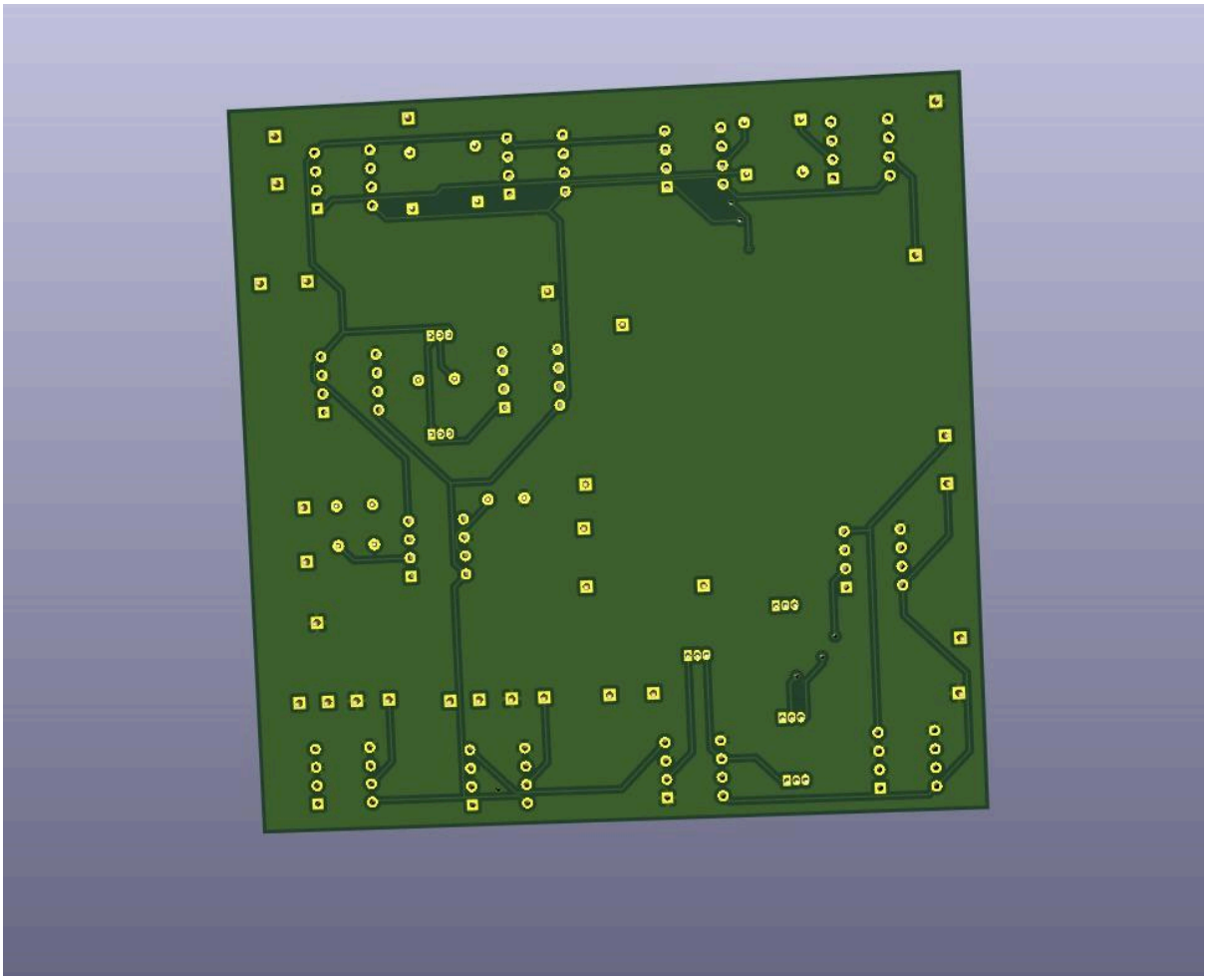

Price in INR:

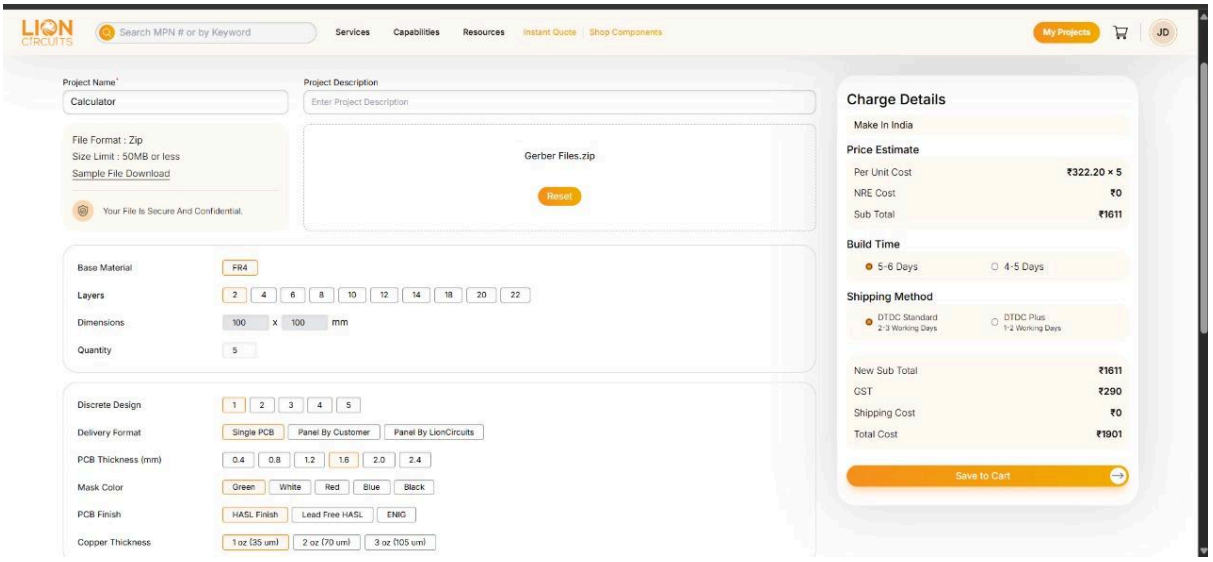
LION CIRCUITS
Search MPN # or by Keyword
Services
Capabilities
Resources
Instant Quote
Shop Components
My Projects
JD
Project Name*
Calculator
Project Description
Enter Project Description
File Format : Zip
Size Limit : 50MB or less
Sample File Download
Your File Is Secure And Confidential.
Gerber Files.zip
Reset
Base Material
FR4
Layers
2 4 6 8 10 12 14 18 20 22
Dimensions
100 x 100 mm
Quantity
5
Discrete Design
1 2 3 4 5
Delivery Format
Single PCB
Panel By Customer
Panel By LionCircuits
PCB Thickness (mm)
0.4 0.8 1.2 1.6 2.0 2.4
Mask Color
Green White Red Blue Black
PCB Finish
HASL Finish
Lead Free HASL
ENIG
Copper Thickness
1 oz (35 um)
2 oz (70 um)
3 oz (105 um)
Charge Details
Make In India
Price Estimate
Per Unit Cost ₹322.20 × 5
NRE Cost ₹0
Sub Total ₹1611
Build Time
5-6 Days
4-5 Days
Shipping Method
DTDC Standard 2-3 Working Days
DTDC Plus 1-2 Working Days
New Sub Total ₹1611
GST ₹290
Shipping Cost ₹0
Total Cost ₹1901
Save to Cart