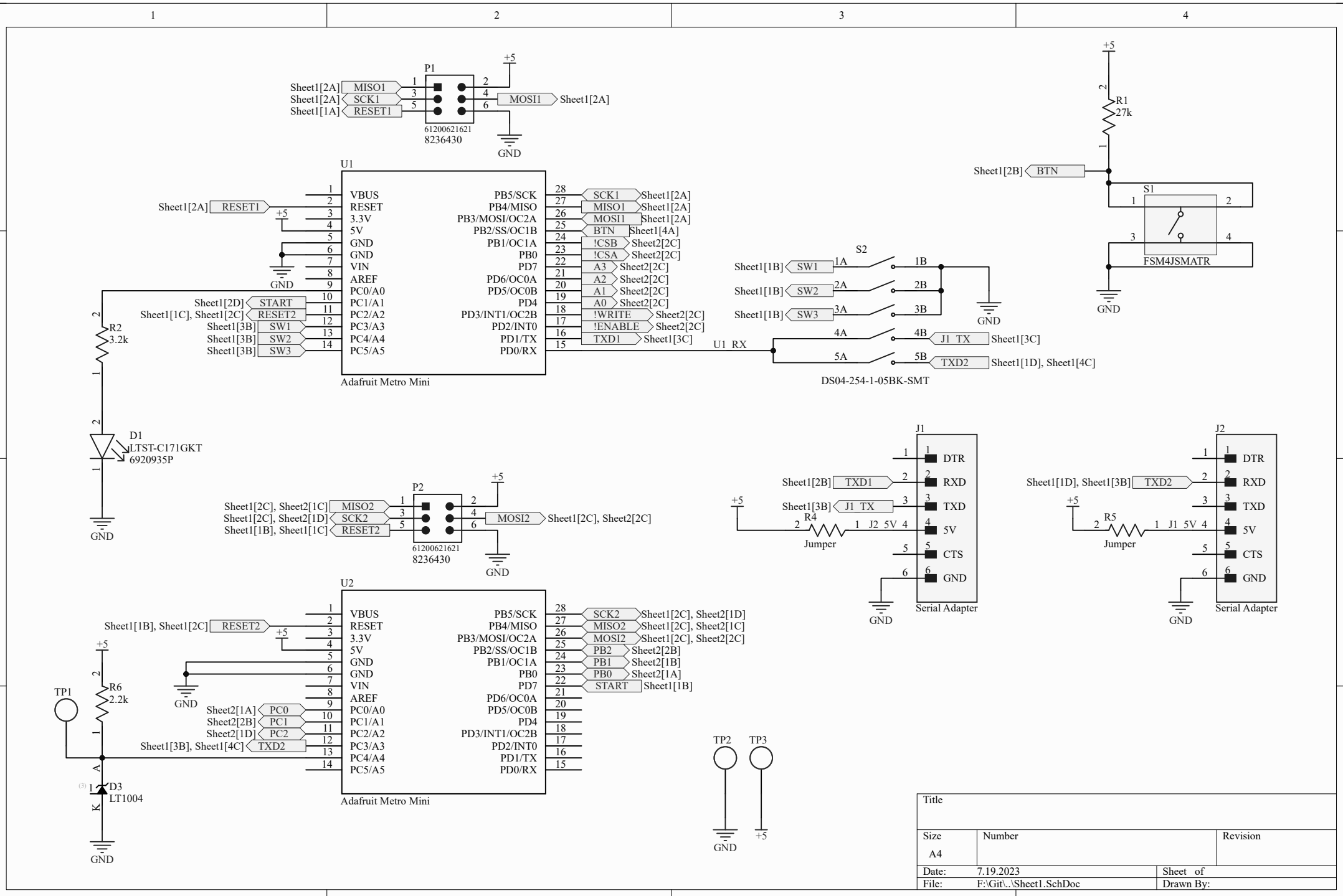
P1
Sheet1[2A] MISO1
Sheet1[2A] SCK1
Sheet1[1A] RESET1
MOSI1 Sheet1[2A]
+5
GND
61200621621
8236430
U1
Sheet1[2A] RESET1
VBUS
RESET
3.3V
5V
GND
GND
VIN
AREF
PC0/A0
PC1/A1
PC2/A2
PC3/A3
PC4/A4
PC5/A5
PB5/SCK
PB4/MISO
PB3/MOSI/OC2A
PB2/SS/OC1B
PB1/OC1A
PB0
PD7
PD6/OC0A
PD5/OC0B
PD4
PD3/INT1/OC2B
PD2/INT0
PD1/TX
PD0/RX
SCK1 Sheet1[2A]
MISO1 Sheet1[2A]
MOSI1 Sheet1[2A]
BTN Sheet1[4A]
!CSB Sheet2[2C]
!CSA Sheet2[2C]
A3 Sheet2[2C]
A2 Sheet2[2C]
A1 Sheet2[2C]
A0 Sheet2[2C]
!WRITE Sheet2[2C]
!ENABLE Sheet2[2C]
TXD1 Sheet1[3C]
Sheet1[2D] START
Sheet1[1C], Sheet1[2C] RESET2
Sheet1[3B] SW1
Sheet1[3B] SW2
Sheet1[3B] SW3
Adafruit Metro Mini
R2
3.2k
D1
LTST-C171GKT
6920935P
R1
27k
Sheet1[2B] BTN
S1
FSM4JSMATR
S2
Sheet1[1B] SW1
Sheet1[1B] SW2
Sheet1[1B] SW3
U1 RX
J1 TX Sheet1[3C]
TXD2 Sheet1[1D], Sheet1[4C]
DS04-254-1-05BK-SMT
P2
Sheet1[2C], Sheet2[1C] MISO2
Sheet1[2C], Sheet2[1D] SCK2
Sheet1[1B], Sheet1[1C] RESET2
MOSI2 Sheet1[2C], Sheet2[2C]
U2
Sheet1[1B], Sheet1[2C] RESET2
Sheet2[1A] PC0
Sheet2[2B] PC1
Sheet2[1D] PC2
Sheet1[3B], Sheet1[4C] TXD2
SCK2 Sheet1[2C], Sheet2[1D]
MISO2 Sheet1[2C], Sheet2[1C]
MOSI2 Sheet1[2C], Sheet2[2C]
PB2 Sheet2[2B]
PB1 Sheet2[1B]
PB0 Sheet2[1A]
START Sheet1[1B]
TP1
R6
2.2k
D3
LT1004
TP2
TP3
J1
Sheet1[2B] TXD1
Sheet1[3B] J1 TX
R4
Jumper
DTR
RXD
TXD
5V
CTS
GND
Serial Adapter
J2
Sheet1[1D], Sheet1[3B] TXD2
R5
Jumper
Title
Size
A4
Number
Revision
Date: 7.19.2023
Sheet of
File: F:\Git\..\Sheet1.SchDoc
Drawn By:

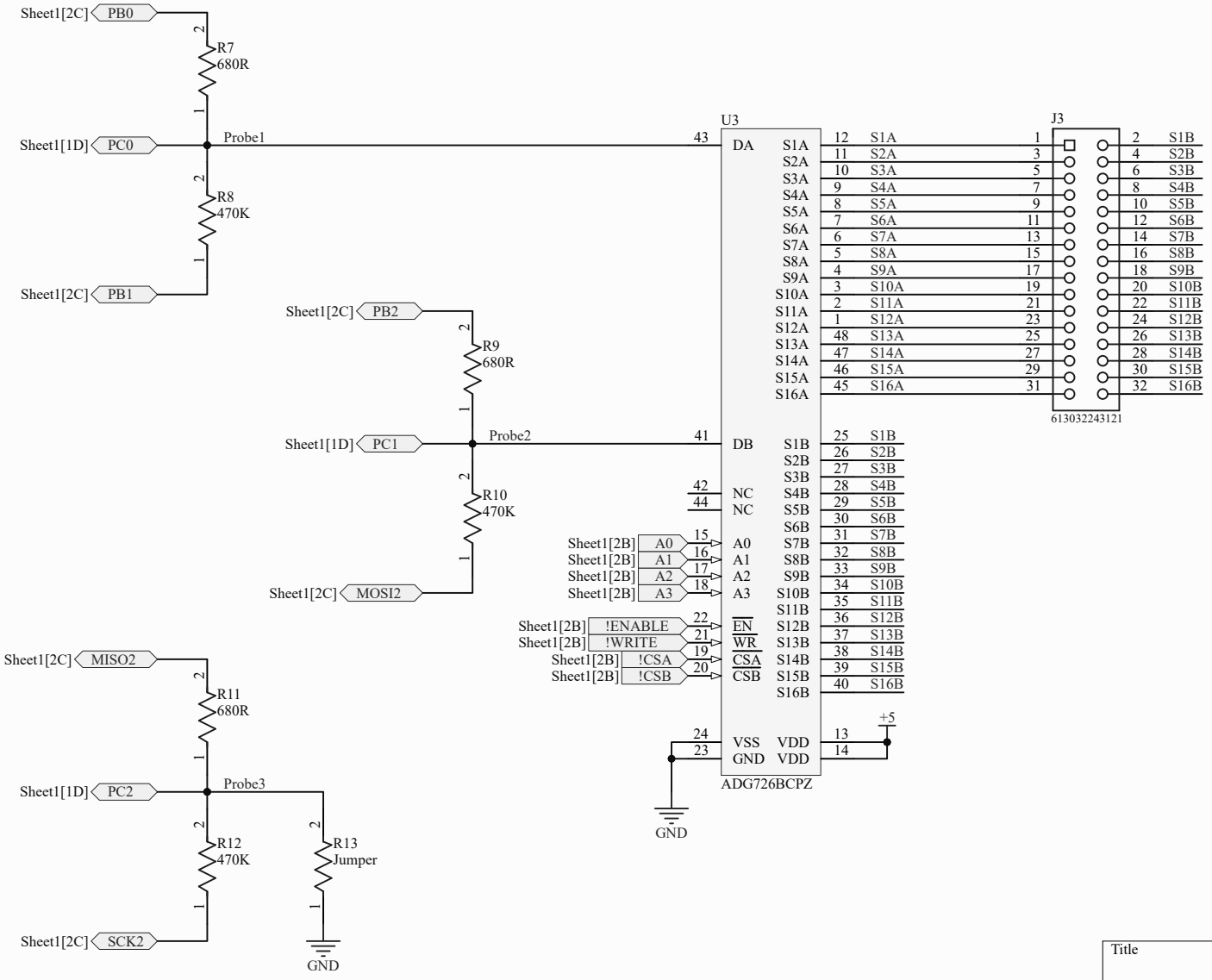

Title		
Size A4	Number	Revision
Date: 7.19.2023		Sheet of
File: F:\Git\..\Sheet2.SchDoc		Drawn By: