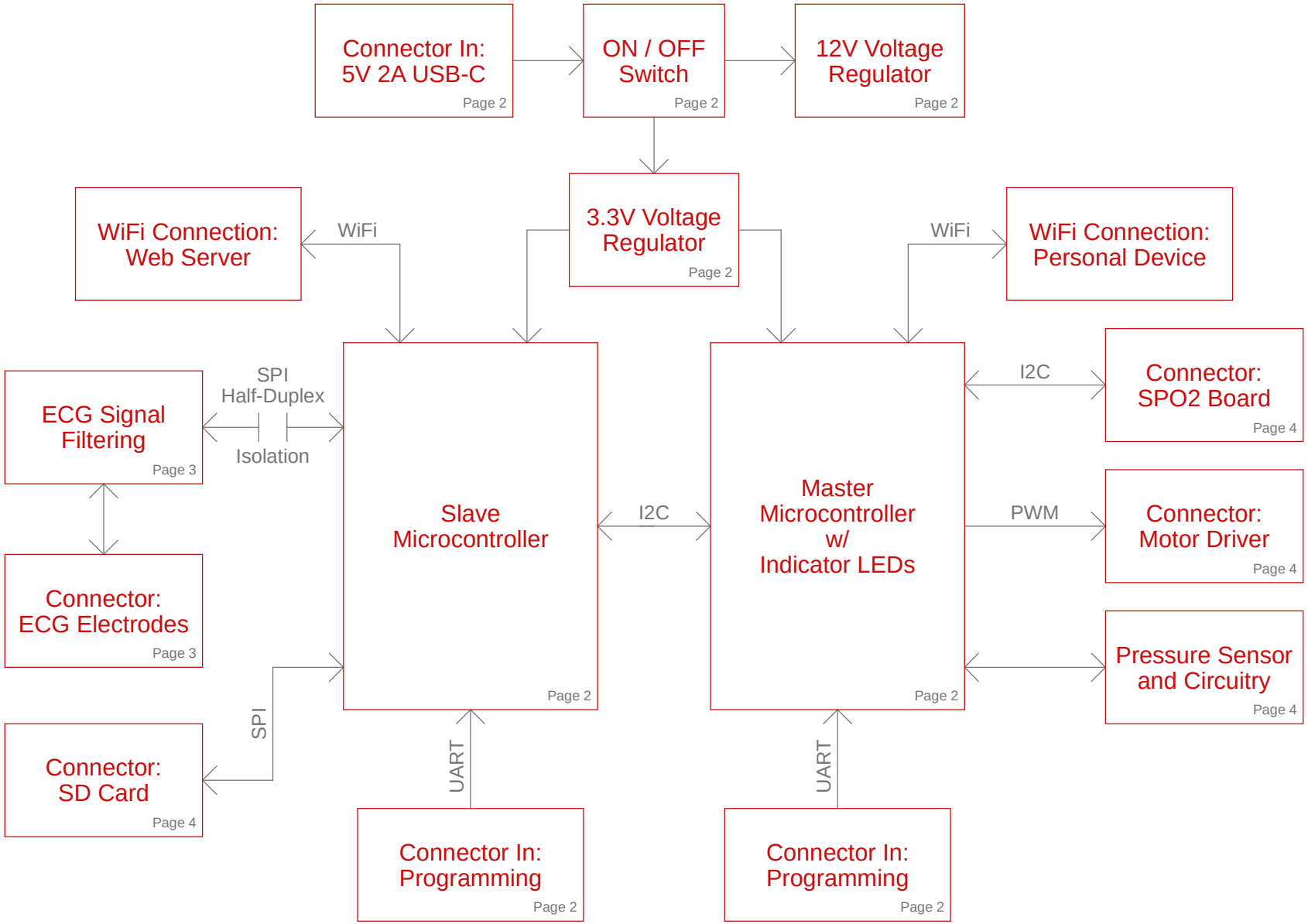

Com thoughts:
Master sends Slave instruction to start ECG
Slave sends blink LED command back for each heart beat detected
Slave sends all done when finished

TITLE: Patient Monitor Board v99	
Document Number:	REV:
Date: 3/14/2024 6:29 PM	Sheet: 1/4

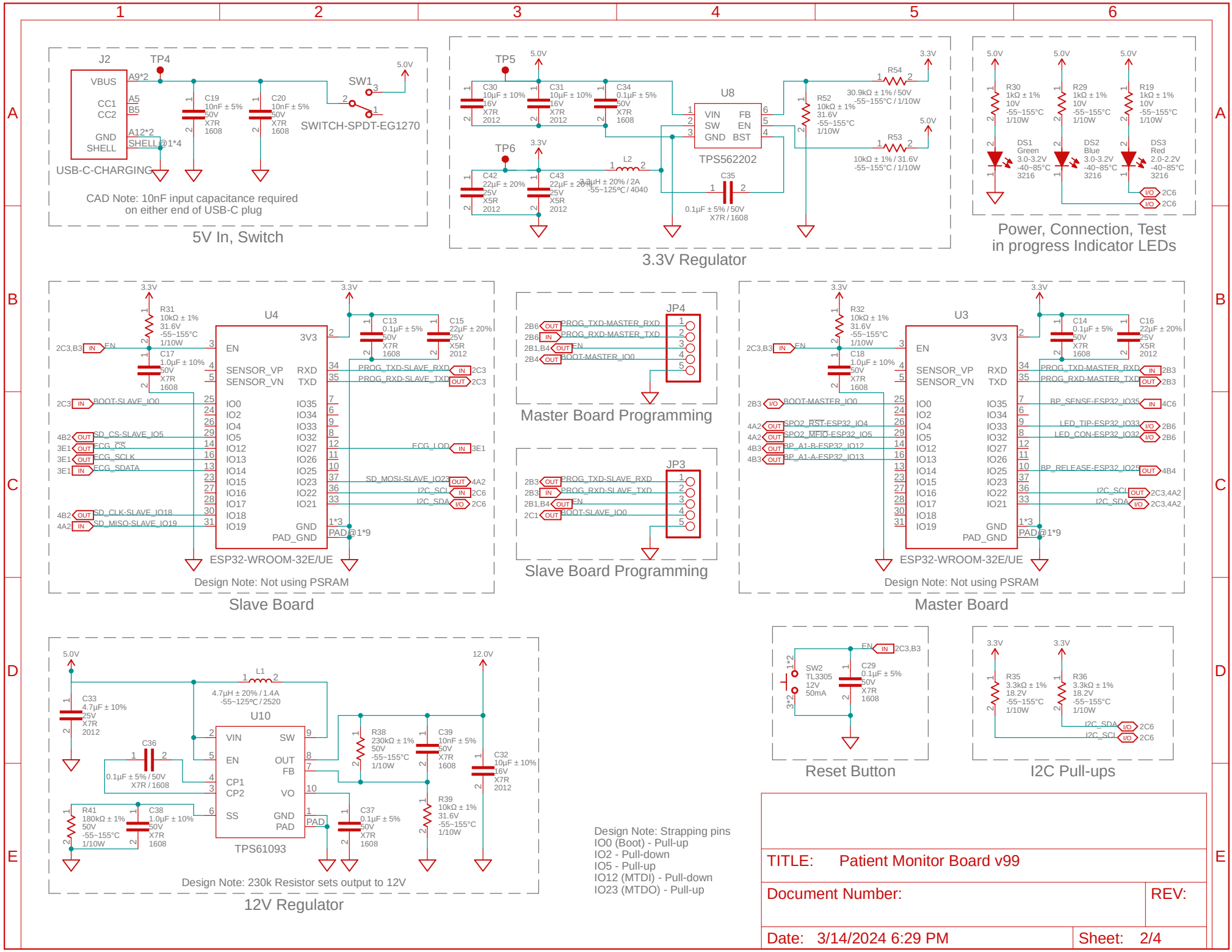
J2
VBUS
CC1
CC2
GND
SHELL
USB-C-CHARGING
TP4
A9*2
A5
B5
A12*2
SHELL@1*4
C19 10nF ± 5% 50V X7R 1608
C20 10nF ± 5% 50V X7R 1608
SW1
SWITCH-SPDT-EG1270
5.0V
CAD Note: 10nF input capacitance required on either end of USB-C plug
5V In, Switch
TP5
TP6
C30 10µF ± 10% 16V X7R 2012
C31 10µF ± 10% 16V X7R 2012
C34 0.1µF ± 5% 50V X7R 1608
C42 22µF ± 20% 25V X5R 2012
C43 22µF ± 20% 25V X5R 2012
L2 3.3µH ± 20% / 2A -55~125ºC / 4040
U8
VIN
SW
GND
FB
EN
BST
TPS562202
C35 0.1µF ± 5% / 50V X7R / 1608
R52 10kΩ ± 1% 31.6V -55~155°C 1/10W
R54 30.9kΩ ± 1% / 50V -55~155°C / 1/10W
R53 10kΩ ± 1% / 31.6V -55~155°C / 1/10W
3.3V
3.3V Regulator
R30 1kΩ ± 1% 10V -55~155°C 1/10W
R29 1kΩ ± 1% 10V -55~155°C 1/10W
R19 1kΩ ± 1% 10V -55~155°C 1/10W
DS1 Green 3.0-3.2V -40~85°C 3216
DS2 Blue 3.0-3.2V -40~85°C 3216
DS3 Red 2.0-2.2V -40~85°C 3216
I/O 2C6
Power, Connection, Test in progress Indicator LEDs
U4
EN
3V3
SENSOR_VP
SENSOR_VN
RXD
TXD
IO0
IO2
IO4
IO5
IO12
IO13
IO14
IO15
IO16
IO17
IO18
IO19
IO35
IO34
IO33
IO32
IO27
IO26
IO25
IO23
IO22
IO21
GND
PAD_GND
PAD@1*9
ESP32-WROOM-32E/UE
R31 10kΩ ± 1% 31.6V -55~155°C 1/10W
C17 1.0µF ± 10% 50V X7R 1608
C13 0.1µF ± 5% 50V X7R 1608
C15 22µF ± 20% 25V X5R 2012
2C3,B3 IN EN
2C3 IN BOOT-SLAVE_IO0
4B2 OUT SD_CS-SLAVE_IO5
3E1 OUT ECG_CS
3E1 OUT ECG_SCLK
3E1 IN ECG_SDATA
4B2 OUT SD_CLK-SLAVE_IO18
4A2 IN SD_MISO-SLAVE_IO19
PROG_TXD-SLAVE_RXD IN 2C3
PROG_RXD-SLAVE_TXD OUT 2C3
ECG_LOD IN 3E1
SD_MOSI-SLAVE_IO23 OUT 4A2
I2C_SCL IN 2C6
I2C_SDA I/O 2C6
Design Note: Not using PSRAM
Slave Board
JP4
2B6 OUT PROG_TXD-MASTER_RXD
2B6 IN PROG_RXD-MASTER_TXD
2B1,B4 OUT EN
2B4 OUT BOOT-MASTER_IO0
Master Board Programming
JP3
2B3 OUT PROG_TXD-SLAVE_RXD
2B3 IN PROG_RXD-SLAVE_TXD
2B1,B4 OUT EN
2C1 OUT BOOT-SLAVE_IO0
Slave Board Programming
U3
R32 10kΩ ± 1% 31.6V -55~155°C 1/10W
C18 1.0µF ± 10% 50V X7R 1608
C14 0.1µF ± 5% 50V X7R 1608
C16 22µF ± 20% 25V X5R 2012
2C3,B3 IN EN
2B3 I/O BOOT-MASTER_IO0
4A2 OUT SPO2_RST-ESP32_IO4
4A2 OUT SPO2_MFIO-ESP32_IO5
4B3 OUT BP_A1-B-ESP32_IO12
4B3 OUT BP_A1-A-ESP32_IO13
PROG_TXD-MASTER_RXD IN 2B3
PROG_RXD-MASTER_TXD OUT 2B3
BP_SENSE-ESP32_IO35 IN 4C6
LED_TIP-ESP32_IO33 I/O 2B6
LED_CON-ESP32_IO32 I/O 2B6
BP_RELEASE-ESP32_IO25 OUT 4B4
I2C_SCL OUT 2C3,4A2
I2C_SDA I/O 2C3,4A2
Design Note: Not using PSRAM
Master Board
5.0V
12.0V
L1 4.7µH ± 20% / 1.4A -55~125ºC / 2520
C33 4.7µF ± 10% 25V X7R 2012
C36 0.1µF ± 5% / 50V X7R / 1608
U10
VIN
EN
CP1
CP2
SS
SW
OUT
FB
VO
GND
PAD
TPS61093
R41 180kΩ ± 1% 50V -55~155°C 1/10W
C38 1.0µF ± 10% 50V X7R 1608
R38 230kΩ ± 1% 50V -55~155°C 1/10W
C39 10nF ± 5% 50V X7R 1608
C32 10µF ± 10% 16V X7R 2012
C37 0.1µF ± 5% 50V X7R 1608
R39 10kΩ ± 1% 31.6V -55~155°C 1/10W
Design Note: 230k Resistor sets output to 12V
12V Regulator
Design Note: Strapping pins
IO0 (Boot) - Pull-up
IO2 - Pull-down
IO5 - Pull-up
IO12 (MTDI) - Pull-down
IO23 (MTDO) - Pull-up
SW2 TL3305 12V 50mA
C29 0.1µF ± 5% 50V X7R 1608
EN IN 2C3,B3
Reset Button
R35 3.3kΩ ± 1% 18.2V -55~155°C 1/10W
R36 3.3kΩ ± 1% 18.2V -55~155°C 1/10W
I2C_SDA I/O 2C6
I2C_SCL I/O 2C6
I2C Pull-ups
TITLE: Patient Monitor Board v99
Document Number:
REV:
Date: 3/14/2024 6:29 PM
Sheet: 2/4

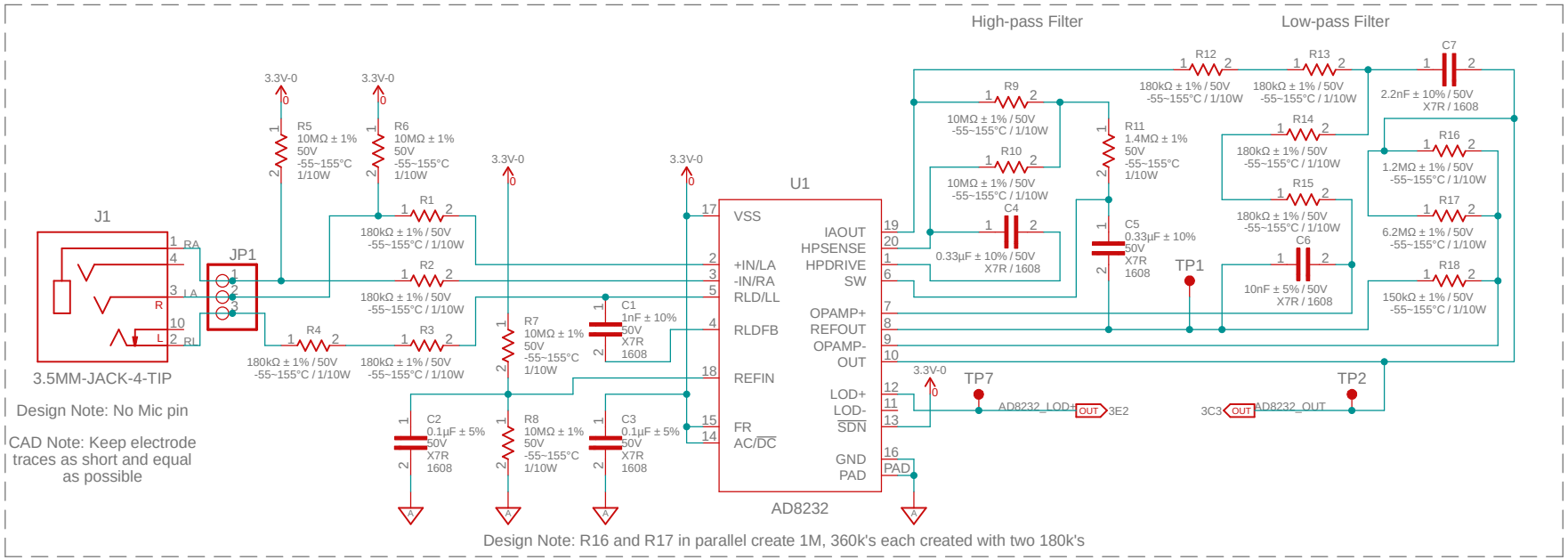

ECG Electrode Connection and Initial Filtering

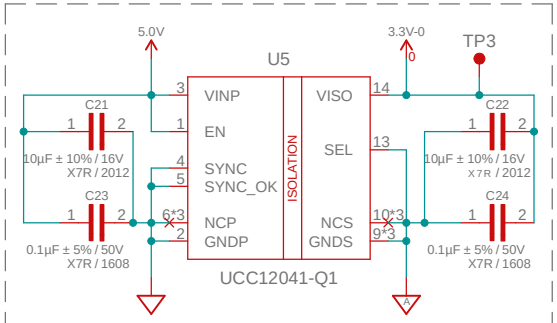

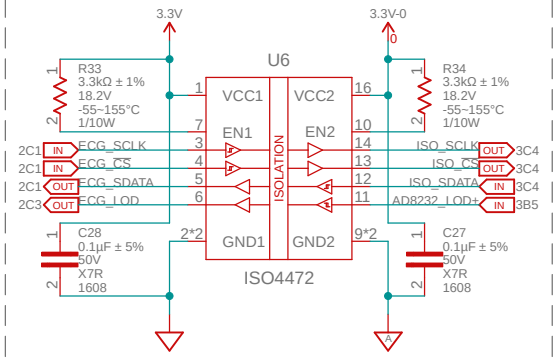

Isolation

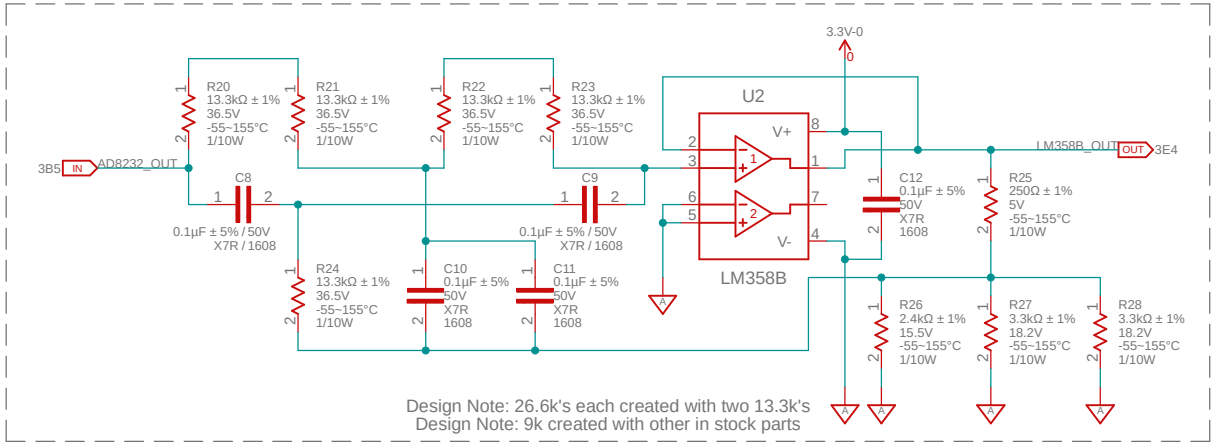

60Hz Notch Filter

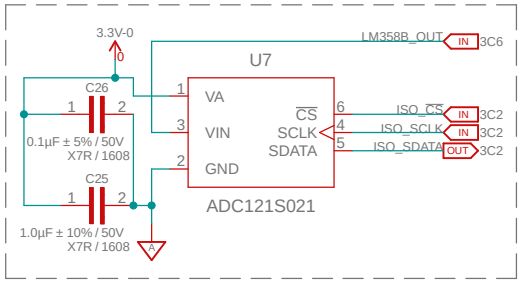

ADC

TITLE: Patient Monitor Board v99	
Document Number:	REV:
Date: 3/14/2024 6:29 PM	Sheet: 3/4

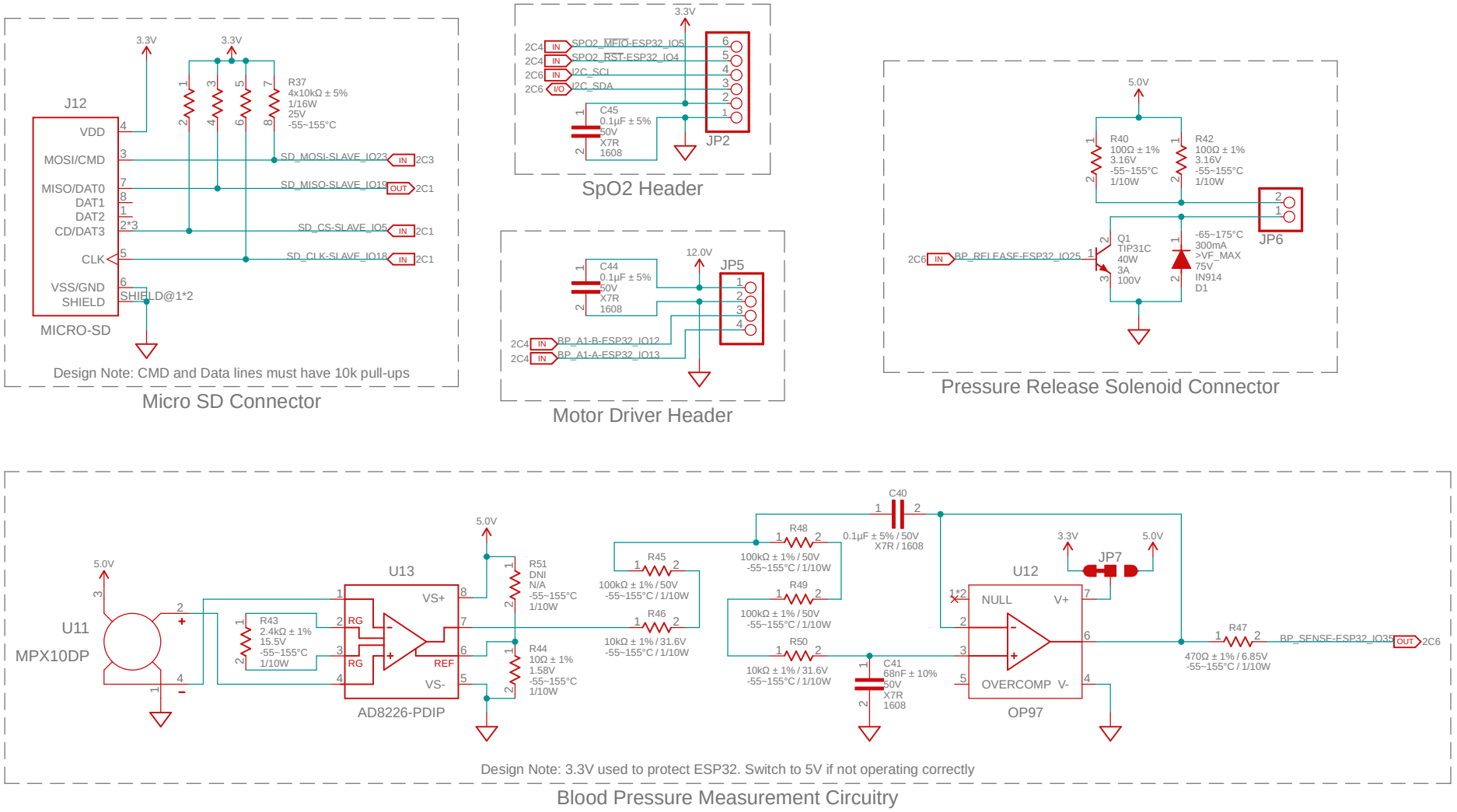

TITLE:	Patient Monitor Board v99
Document Number:	REV:
Date: 3/14/2024 6:29 PM	Sheet: 4/4