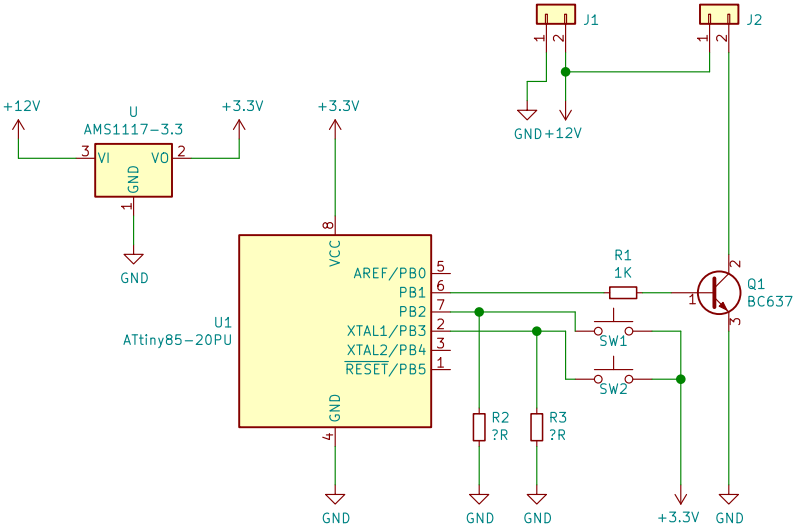

Jakob Stendahl

Sheet: /

File: StickmanCostume.sch

Title: Stickman-costume Controller

Size: User	Date: 2018-11-02	**Rev: 1**
KiCad E.D.A. kicad 5.0.1		Id: 1/1