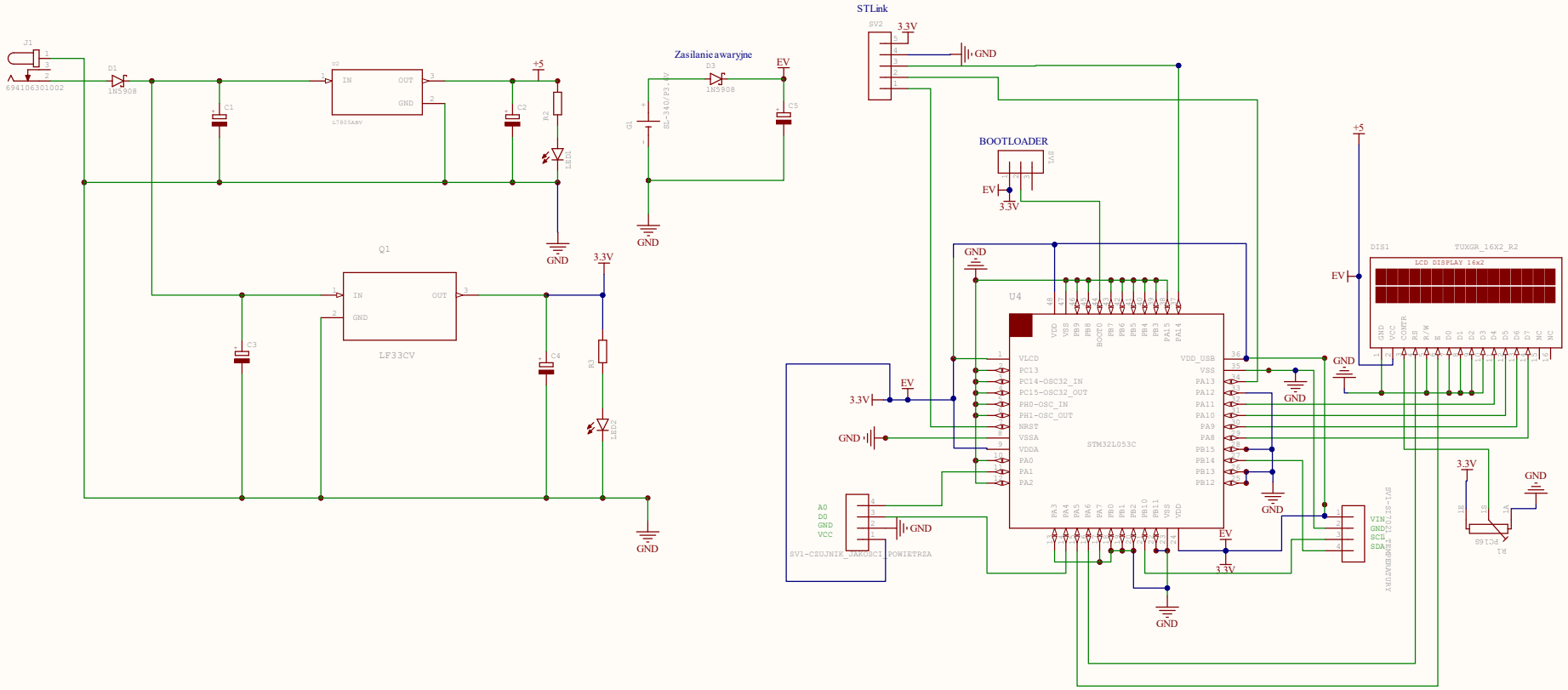

This document was created by an application that isn't licensed to use novaPDF.
Purchase a license to generate PDF files without this notice.