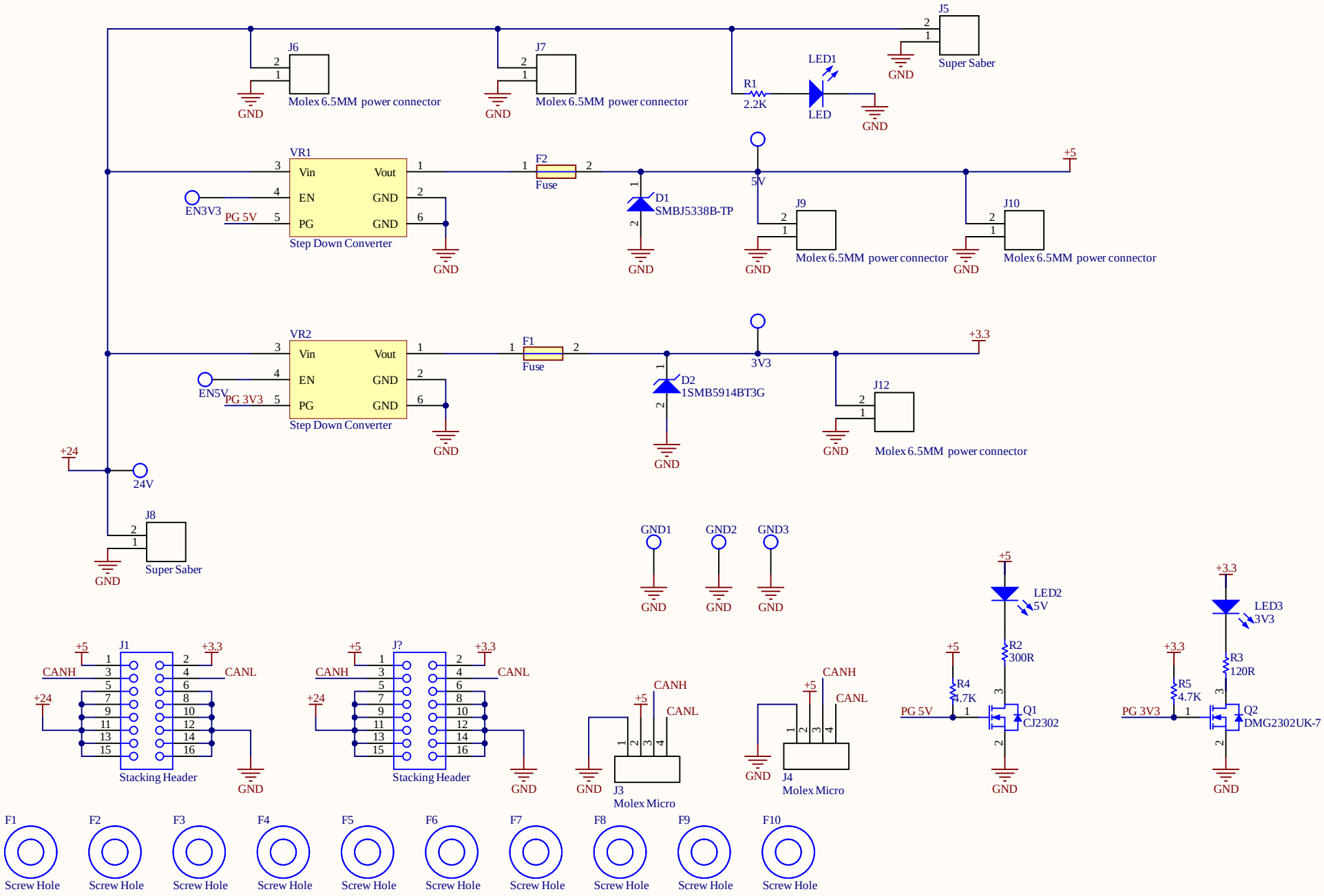

Title *			Husky Robotics University of Washington Mechanical Engineering Seattle, WA
Size: A	Author: *	Revision:	
Date: 12/27/2020		Sheet of	
File: Power Distro.SchDoc			

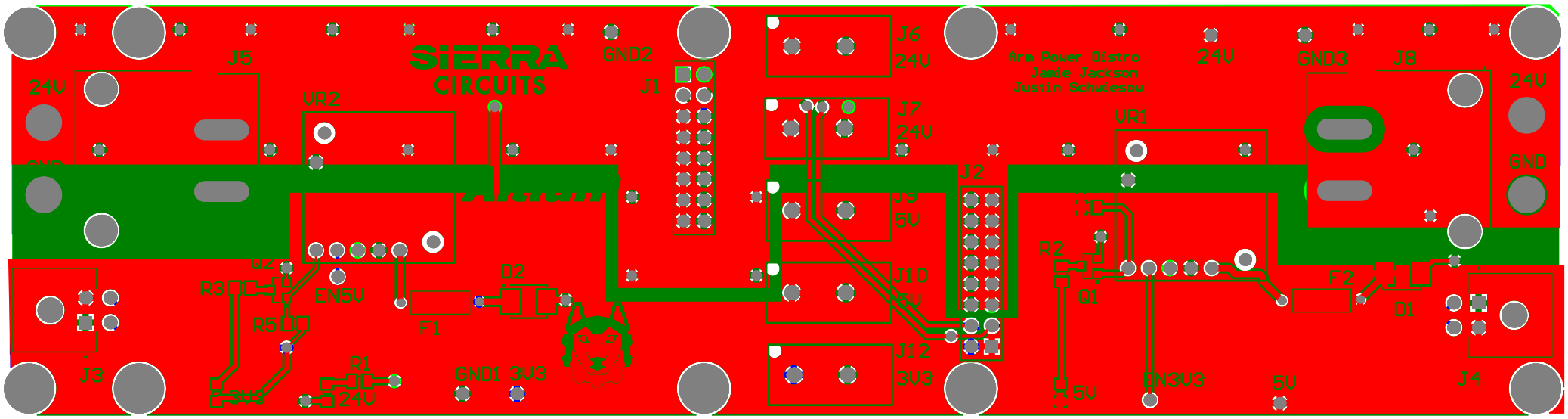
SIERRA
CIRCUITS
Arm Power Distro
Jamie Jackson
Justin Schulesou
J5
24V
GND2
J1
J6
24V
J7
24V
J9
5V
J10
5V
J12
3V3
J2
VR2
VR1
24V
GND3
J8
24V
GND
R3
R2
EN5V
R5
F1
D2
R1
24V
GND1
3V3
3V3
R2
Q1
5V
EN3V3
5V
F2
D1
J3
J4