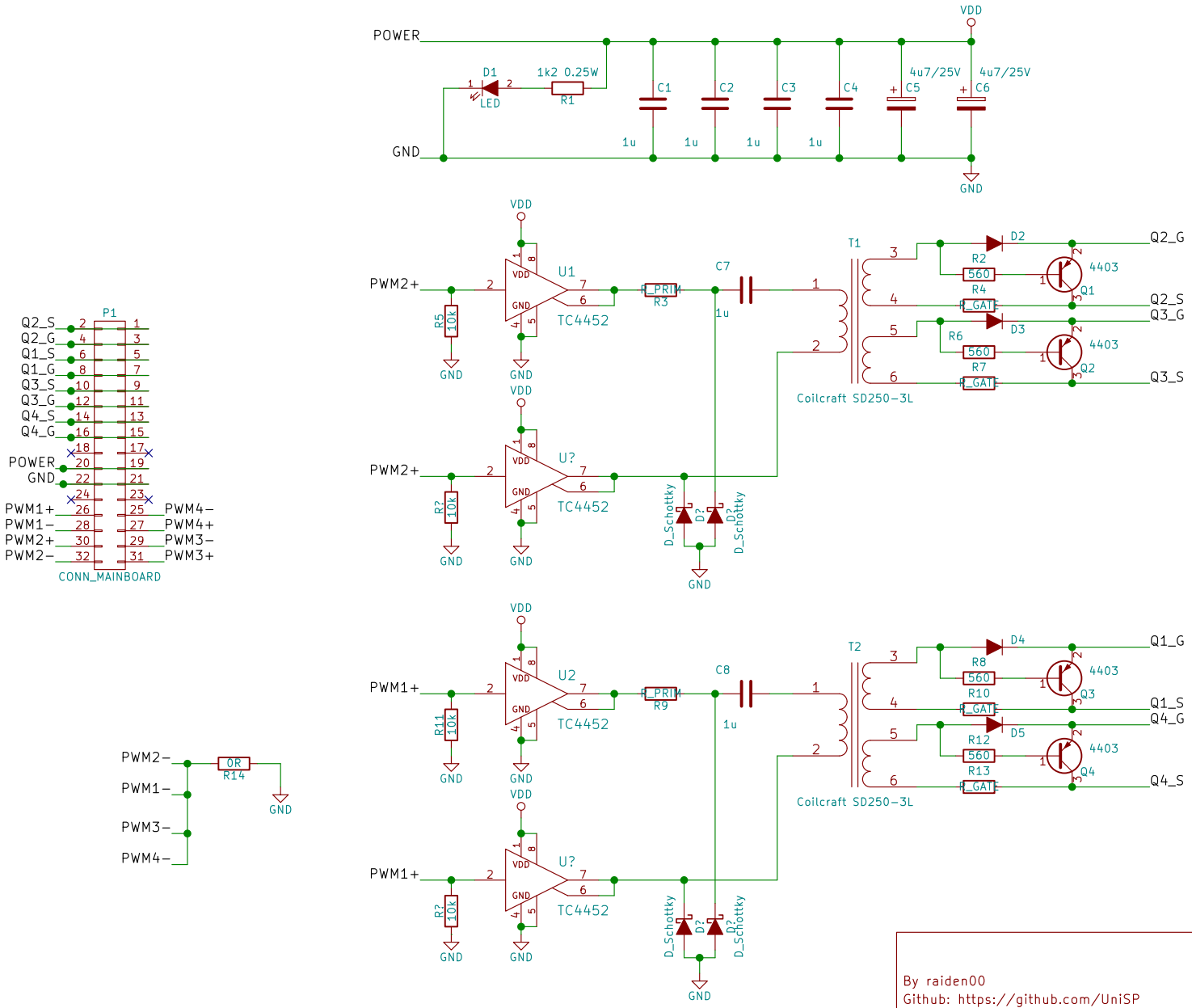

Driving PWM signals must be provide BEFORE power supply in order to avoid unexpected transistors behaviours.

By raiden00
Github: https://github.com/UniSP
http://railab.me

Sheet: /
File: UniSP−bridge−driver−PSFB.sch

Title: UniSP−bridge_driver

Size: A4	Date: 2015−09−19	**Rev: 0.2**
KiCad E.D.A. kicad 4.0.1−stable		Id: 1/1