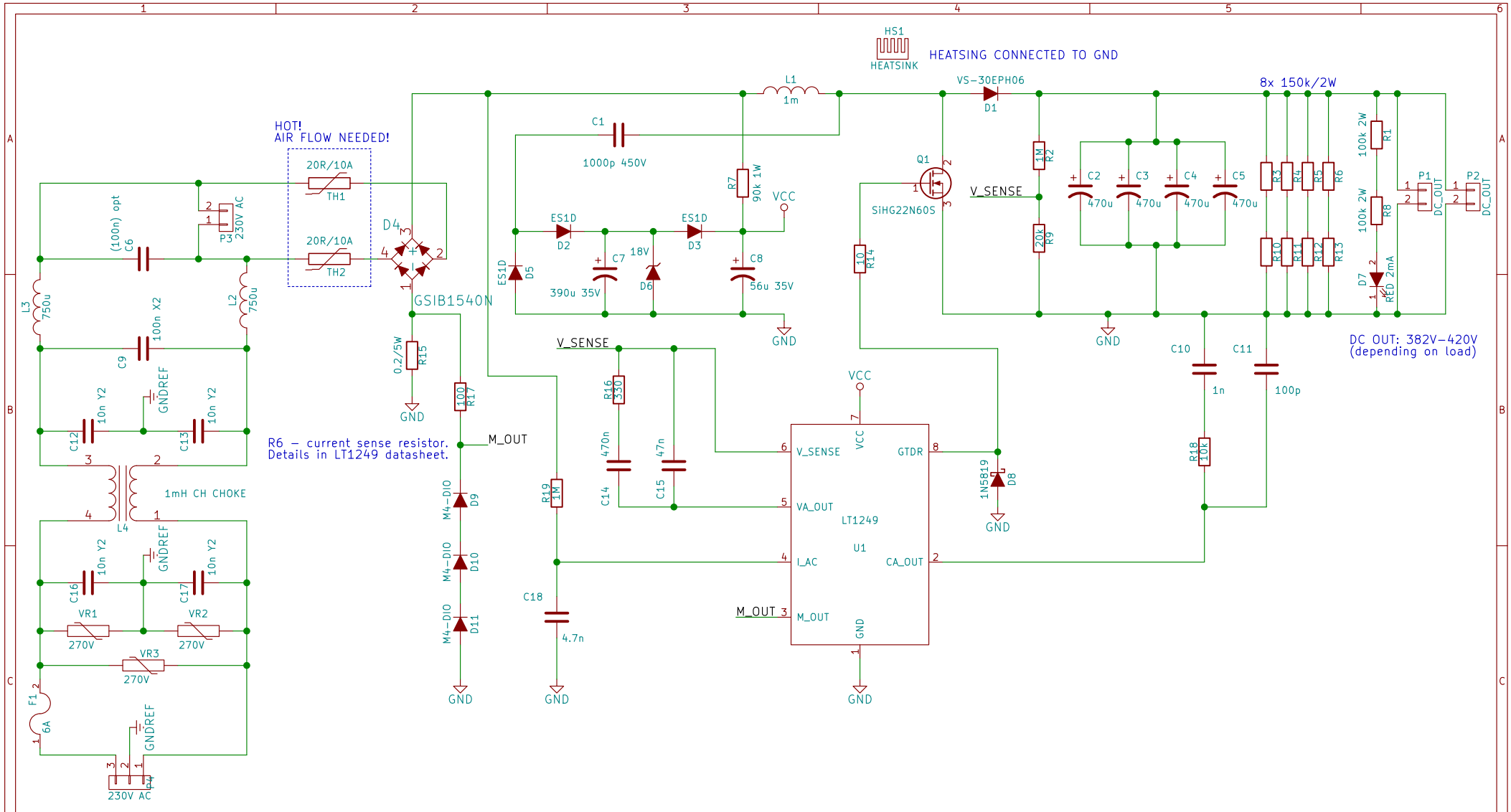

By raden00
Github: https://github.com/UniSP
http://railab.me

Sheet: /
File: UniSP-pfc-LT1249.sch

Title: UniSP-pfc-LT1249

Size: A4	Date: 2015-09-19	**Rev: 0.2**
KiCad E.D.A. kicad 4.0.1-stable		Id: 1/1