THIS DOCUMENT CONTAINS PROPRIETARY AND CONFIDENTIAL INFORMATION OF CONTROL DEVICES LLC AND MUST BE USED STRICTLY IN ACCORDANCE WITH THE LIMITED PURPOSE FOR WHICH IT WAS SUBMITTED. ANY REPRODUCTION, DISCLOSURE OR USE OF THIS DOCUMENT IS EXPRESSLY PROHIBITED, EXCEPT AS OTHERWISE AGREED IN WRITING.

REVISIONS

REV.	DESCRIPTION	DATE	ECN NO.
A	RELEASED TO PRODUCTION	6/10/14	14-227
B	UPDATE THROAT, OVERALL LENGTH, INTERN DEPTH	6/20/14	14-242
C	UPDATED PER MANUFACTURED PART	6/26/15	15-105

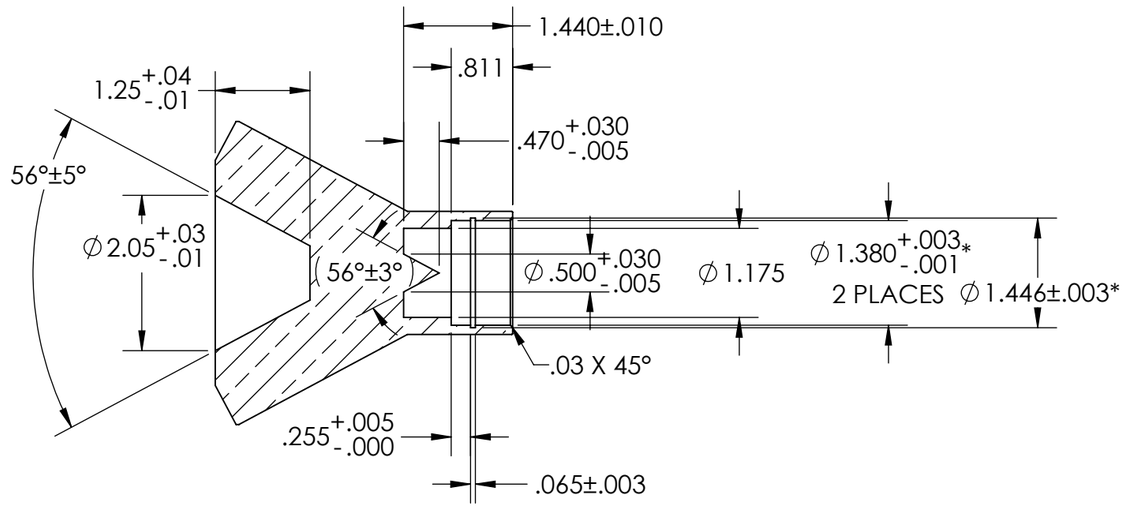

SECTION A-A

Distributor Blank

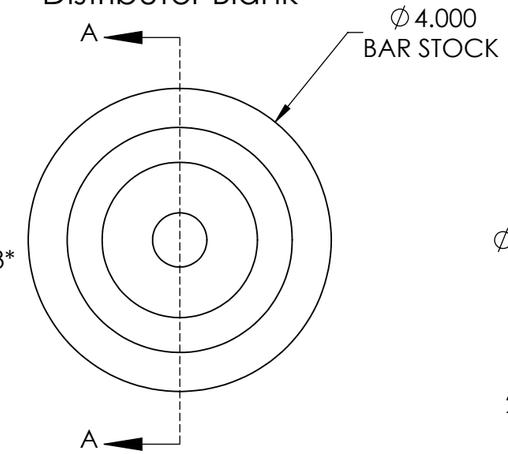

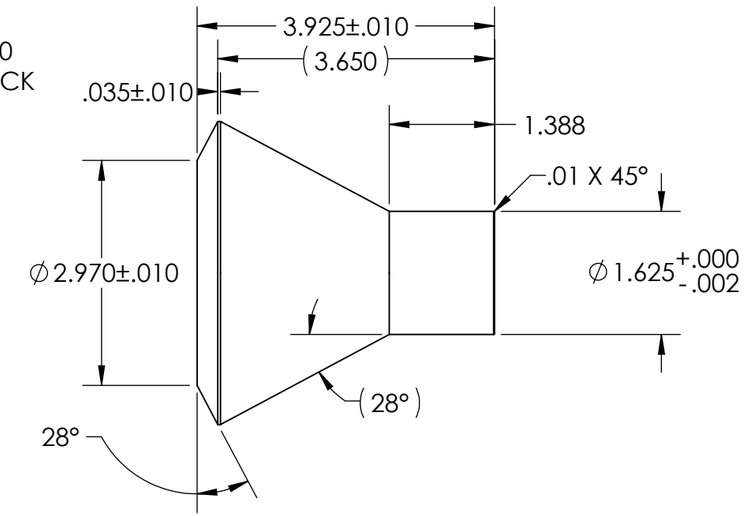

Complete Distributor

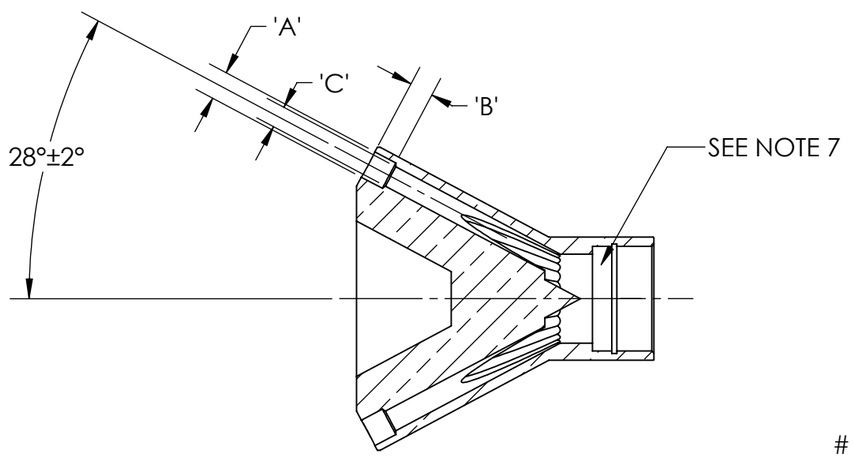

SECTION B-B

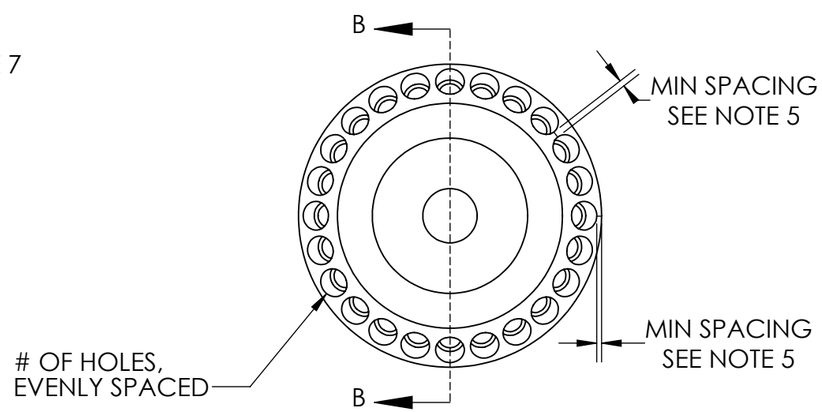

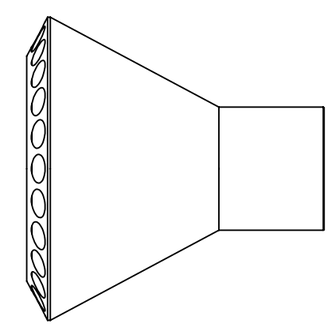

PART NUMBER #=NUMBER OF HOLES	# OF HOLES	'A' COUNTERBORE DIA (+/-.002)	'B' COUNTERBORE DEPTH (+/-.010)	'C' THRU HOLE
1304-#-3/16	41 TO 45	.192	.210	.140
1304-#-1/4	32 TO 35	.254	.240	.187
1304-#-5/16	27 TO 30	.317	.250	.236
1304-#-3/8	22 TO 24	.379	.312	.291

NOTES:
1. PART TO BE CLEAN AND FREE OF BURRS.
2. BREAK ALL UNMARKED CORNERS .005.
3. ALL UNMARKED MACHINED SURFACES √63 MAX.
4. ALL DIAMETERS MARKED "*" TO BE CONCENTRIC WITHN .003 TIR.
5. MINUMUM HOLE SPACING BETWEEN EDGE OF BODY AND BETWEEN HOLES TO BE .050.
6. MATERIAL TO BE STRESS RELIEVED (550 F FOR 1 HOUR MIN)
7. INSIDE CAVITY OF DISTRIBUTOR TO BE BEAD BLASTED TO REMOVE ALL BURRS AND SHARP EDGES

ITEM NO.	PART OR IDENTIFYING NO.	NOMENCLATURE OR DESCRIPTION	MATERIAL SPECIFICATION	QTY REQD

PARTS LIST

UNLESS OTHERWISE SPECIFIED DIMENSIONS ARE IN INCHES TOLERANCES ARE:
FRACTIONS ± | DECIMALS .XX ±.02 .XXX ± .005 | ANGLES ±1°

MATERIAL: UNS C36000 H02 BRASS

FINISH: SEE NOTE 6

DO NOT SCALE DRAWING

CAD GENERATED DRAWING, DO NOT MANUALLY UPDATE

APPROVALS		DATE
DRAWN	JAT	02/26/14
CHECKED		
RESP ENG		
MFG ENG		
MASS	5.133 LBS	

Control Devices LLC
1555 LARKIN WILLIAMS ROAD, FENTON MO 63026

DISTRIBUTOR, NOZZLE, BLANK

SIZE B | DWG. NO. 1304-A-BLNK | REV C

SCALE 1:1 | SHEET 1 OF 1