PART NO.	DESCRIPTION

THIS DOCUMENT CONTAINS PROPRIETARY AND CONFIDENTIAL INFORMATION OF CONTROL DEVICES LLC AND MUST BE USED STRICTLY IN ACCORDANCE WITH THE LIMITED PURPOSE FOR WHICH IT WAS SUBMITTED. ANY REPRODUCTION, DISCLOSURE OR USE OF THIS DOCUMENT IS EXPRESSLY PROHIBITED, EXCEPT AS OTHERWISE AGREED IN WRITING.

REVISIONS

REV.	DESCRIPTION	DATE	ECN NO.
A	RELEASE TO PRODUCTION	3/26/15	15-119

		S40523/163/4-NA	S4053-3/16-1-NA	S4054-3/16-1-NA	S40543/161.5-NA	S4056-3/16-2-NA	S40583/162.5-NA	S40593/162.5-NA	S4059-3/16-3-NA
ASSEMBLY STYLE		A	A	A	A	A	A	A	A
ITEM	PART NO.	QUANTITY							
1	DISTIBUTOR: S405-2-3/16-1/2	1							
	DISTIBUTOR: S405-3-3/16-1/2		1						
	DISTIBUTOR: S405-4-3/16-1/2			1	1				
	DISTIBUTOR: S405-6-3/16-1/2					1			
	DISTIBUTOR: S405-8-3/16-1/2						1		
	DISTIBUTOR: S405-9-3/16-1/2							1	1
2	DISTRIBUTOR TUBE: CUTU-0-3/16	2	3	4	4	6	8	9	9
3	INLET TUBE: CUTU-0-1/2	1	1	1	1	1	1	1	1
4	NOZZLE: LR3/4	1							
	NOZZLE: LR1		1	1					
	NOZZLE: LR1-1/2				1				
	NOZZLE: LR2					1			
	NOZZLE: LR2-1/2						1	1	
	NOZZLE: LR3								1
5	SIDE HOLE TUBE: CSW-1/2-X	1	1	1	1	1	1	1	1

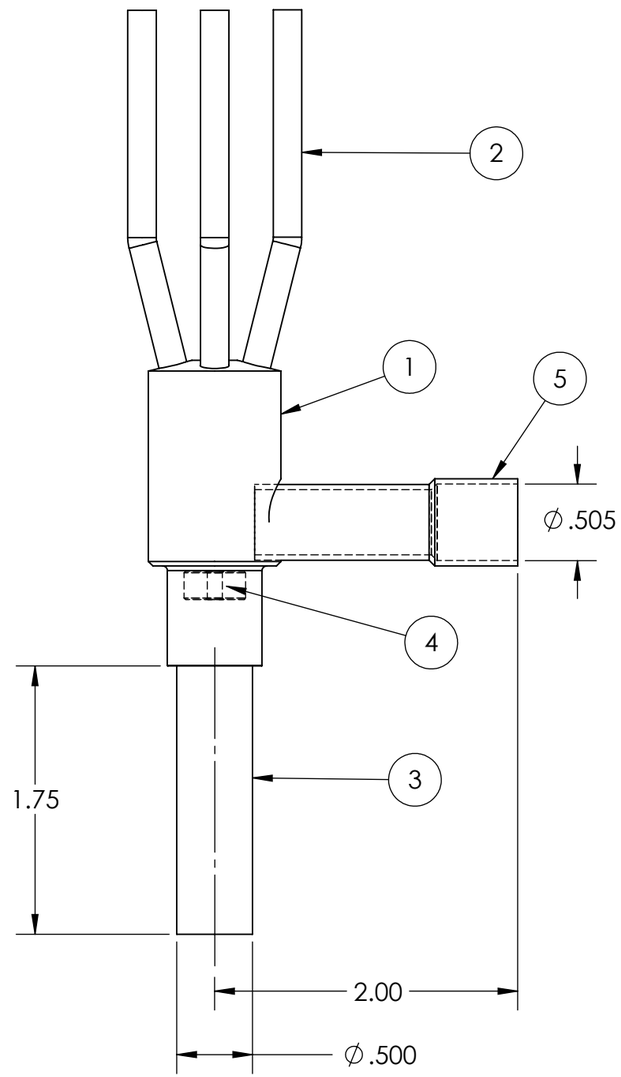

STYLE "A"
S405 BODY STYLE

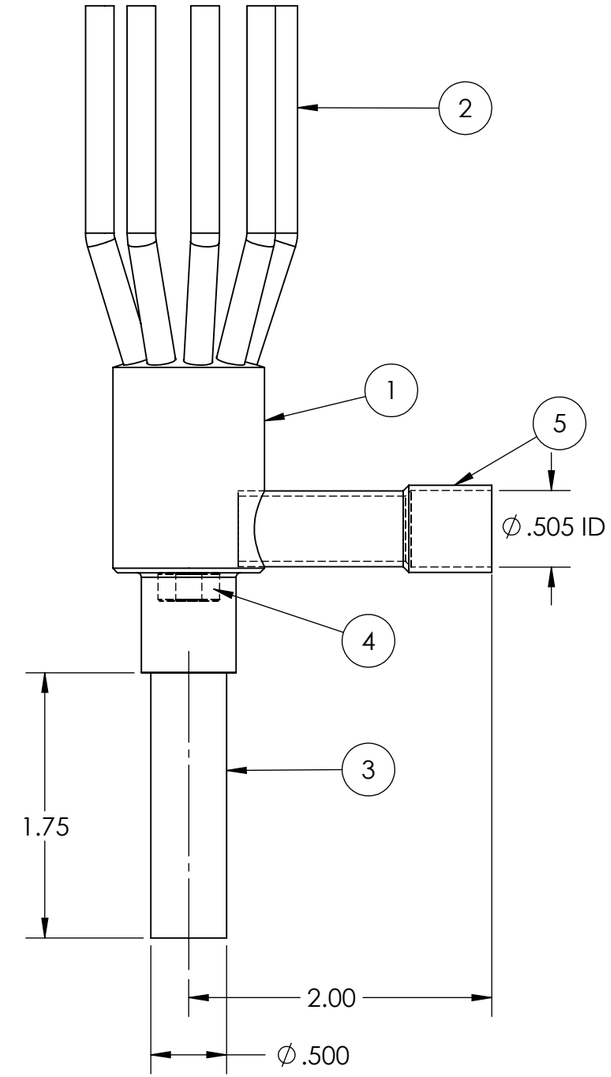

STYLE "A"
S406 BODY STYLE

NOTES:
1. PART TO BE CLEAN AND FREE OF BURRS.
2. BREAK ALL UNMARKED CORNERS .005.
3. ALL UNMARKED MACHINED SURFACES 63 MAX.
4. ALL THREADS TO HAVE A 45° CHAMFER ON LEADING EDGE, 1 TO 1 1/2 THREADS LONG.
5. ALL DIAMETERS MARKED "*" TO BE CONCENTRIC WITHN .003 TIR.

PRELIMINARY DRAWING

ITEM NO.	PART OR IDENTIFYING NO.	NOMENCLATURE OR DESCRIPTION	MATERIAL SPECIFICATION	QTY REQD

PARTS LIST

UNLESS OTHERWISE SPECIFIED DIMENSIONS ARE IN INCHES
TOLERANCES ARE:
FRACTIONS ± DECIMALS .XX ±.02 .XXX ± .005 ANGLES ± 1

MATERIAL

FINISH

DO NOT SCALE DRAWING

CAD GENERATED DRAWING, DO NOT MANUALLY UPDATE

APPROVALS	DATE
DRAWN I3	03/27/15
CHECKED	
RESP ENG	
MFG ENG	
MASS 0.334 LBS	

Control Devices LLC
1555 LARKIN WILLIAMS ROAD, FENTON MO 63026

DISTRIBUTOR ASSEMBLY
HOT GAS DEFROST

SIZE B | DWG. NO. S4054-3_16-1-NA | REV. A

SCALE 1:2 | SHEET 1 OF 1