Drawing Update: 1104-A-BLNK, Rev D
Date: 03/06/18
Notes: Approved in EPDM.

Distributor Blank

THIS DOCUMENT CONTAINS PROPRIETARY AND CONFIDENTIAL INFORMATION OF CONTROL DEVICES LLC AND MUST BE USED STRICTLY IN ACCORDANCE WITH THE LIMITED PURPOSE FOR WHICH IT WAS SUBMITTED. ANY REPRODUCTION, DISCLOSURE OR USE OF THIS DOCUMENT IS EXPRESSLY PROHIBITED, EXCEPT AS OTHERWISE AGREED IN WRITING.

REVISIONS

REV.	DESCRIPTION	DATE	ECN NO.
A	RELEASED TO PRODUCTION	06/12/14	14-227
B	2.790 WAS 2.720; 1.475 WAS 1.408; .81 WAS .720; ADDED 40°, Ø1.025; REMOVED Ø1.474; .245 WAS REF DIM	01/05/15	15-008
C	UPDATED DRILL TABLE FOR .360 STD DEPTH	08/30/16	16-361
D	UPDATED FACE CBR DIMENSIONS	03/02/17	17-139

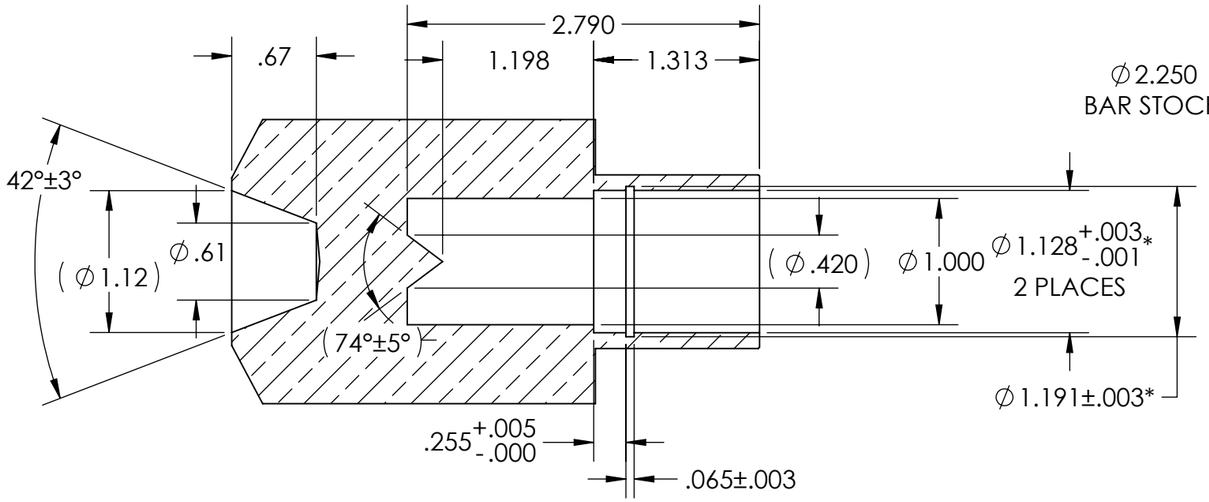

SECTION A-A

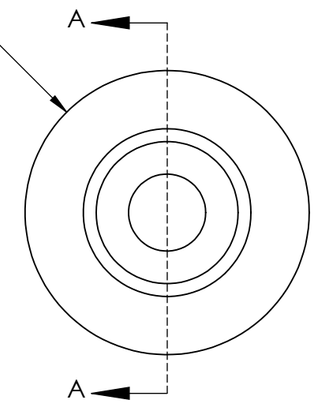

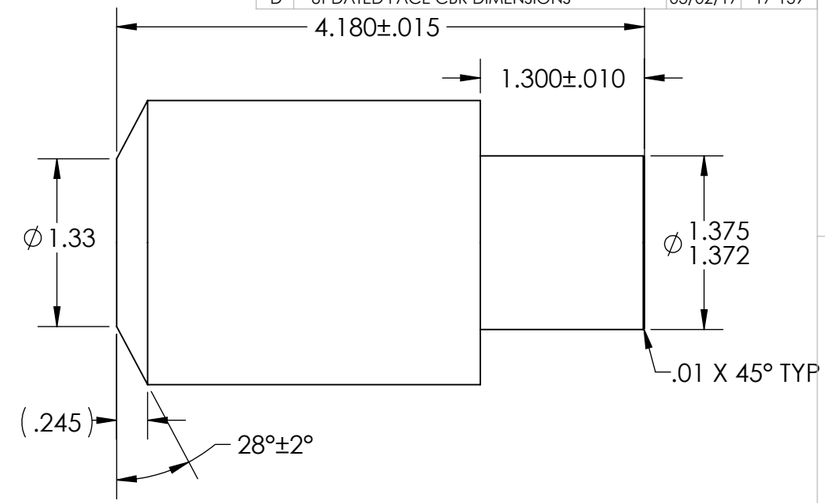

OPTION	ØD	ØE	F
-1/2	.507	.408	.500
-5/8	.632	.530	.400
-7/8	.882	.750	.400

Complete Distributor

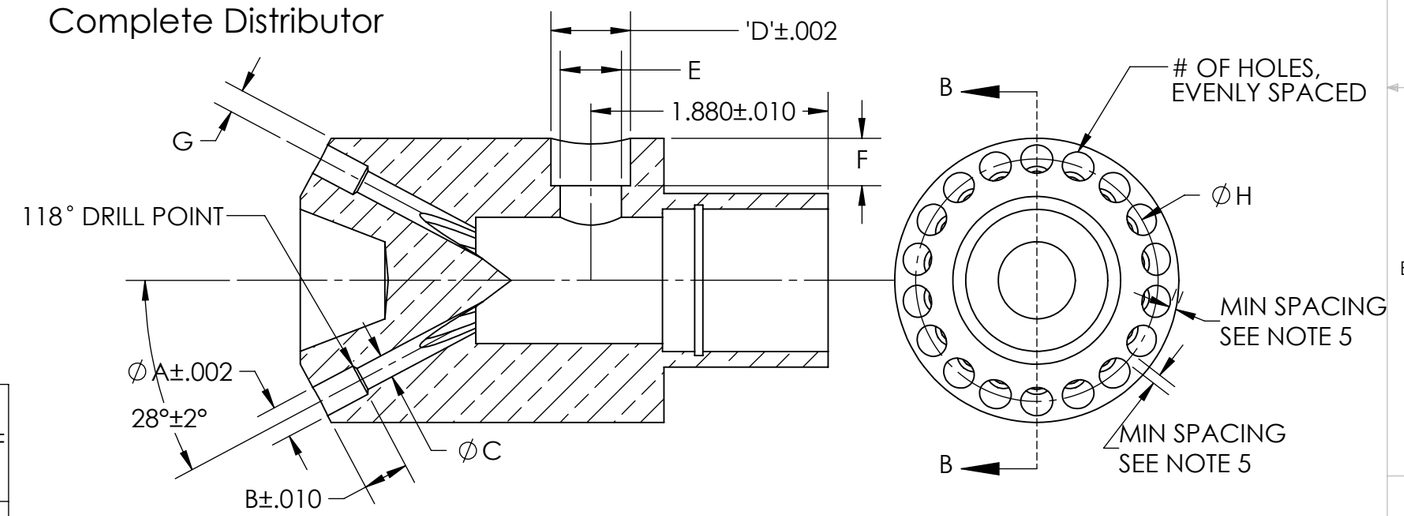

SECTION B-B

PART NUMBER #=NUMBER OF HOLES	# OF HOLES	ØA COUNTERBORE DIA (+/-.002)	'B' COUNTERBORE DEPTH (+/-.010)	ØC THRU HOLE	G REF	ØH REF
1104-#-5/32	18 TO 28	.160	.360	.109	.159	1.970
	29		.172			
1104-#-3/16	15 TO 23	.192	.360	.140	.172	1.946
	24 TO 25		.210			
1104-#-1/4	11 TO 18	.254	.360	.187	.187	1.920
	19		.240			
1104-#-5/16	9 TO 14	.317	.360	.236	.235	1.835
1104-#-3/8	8 TO 11	.379	.360	.291	.266	1.781

NOTES:
1. PART TO BE CLEAN AND FREE OF BURRS.
2. BREAK ALL UNMARKED CORNERS .005.
3. ALL UNMARKED MACHINED SURFACES √63 MAX.
4. ALL DIAMETERS MARKED "*" TO BE CONCENTRIC WITHN .003 TIR.
5. MINUMUM HOLE SPACING BETWEEN EDGE OF BODY AND BETWEEN HOLES TO BE .050.
6. MATERIAL TO BE STRESS RELIEVED (550 F FOR 1 HOUR MIN)
7. INSIDE CAVITY OF DISTRIBUTOR TO BE BEAD BLASTED TO REMOVE ALL BURRS AND SHARP EDGES

ITEM NO.	PART OR IDENTIFYING NO.	NOMENCLATURE OR DESCRIPTION	MATERIAL SPECIFICATION	QTY REQD

PARTS LIST

UNLESS OTHERWISE SPECIFIED DIMENSIONS ARE IN INCHES TOLERANCES ARE:
FRACTIONS ±1/64 DECIMALS .XX ±.02 .XXX ±.005 ANGLES ±1°

MATERIAL: UNS C36000 H02 BRASS
FINISH: SEE NOTE 6
DO NOT SCALE DRAWING

CAD GENERATED DRAWING, DO NOT MANUALLY UPDATE

APPROVALS		DATE
DRAWN	JAT	03/11/14
CHECKED		
RESP ENG		
MFG ENG		
MASS	3.120 LBS	

Control Devices LLC
1555 LARKIN WILLIAMS ROAD, FENTON MO 63026

DISTRIBUTOR, NOZZLE, BLANK WITH SIDE HOLE

SIZE B | DWG. NO. 1104-A-BLNK | REV. D
SCALE 1.5:1 | SHEET 1 OF 1