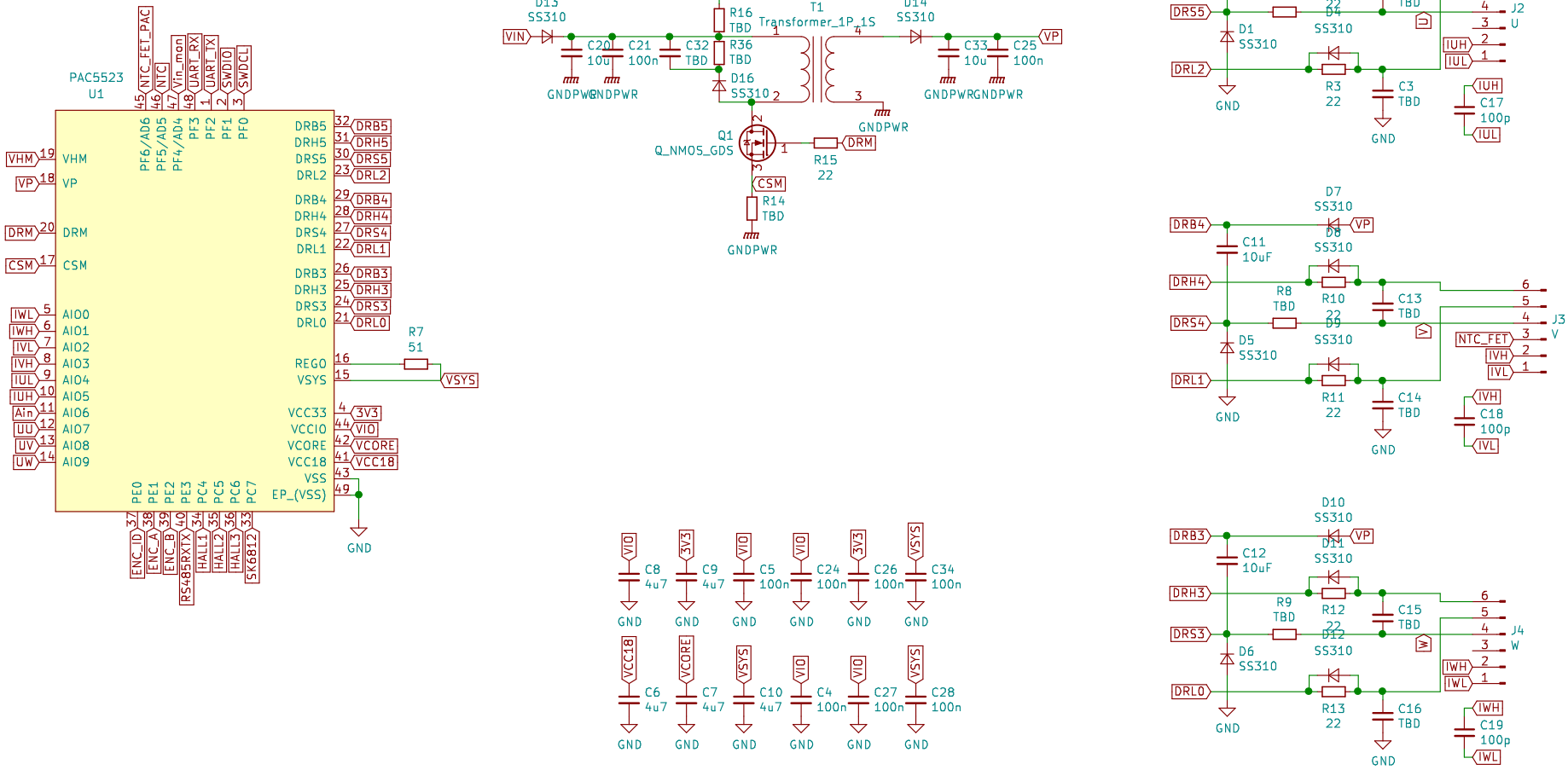

Sheet: Connector and Resistors

File: con.sch

Sheet: ESD and other ICs

File: IC.sch

Sheet: /
File: PAC5523.sch

Title:

Size: A4	Date:	Rev:
KiCad E.D.A. kicad 5.1.0		Id: 1/3

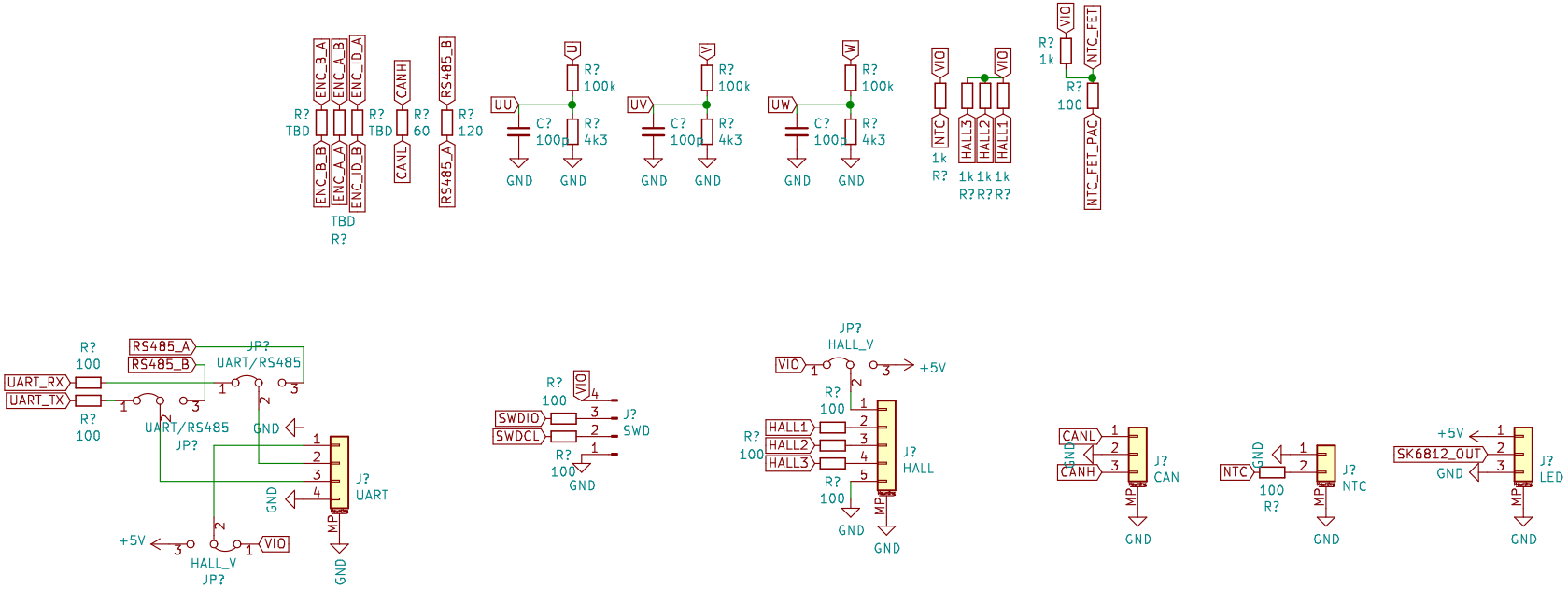

Sheet: /Connector and Resistors/
File: con.sch

Title:

Size: A4	Date:	Rev:
KiCad E.D.A. kicad 5.1.0		Id: 2/3

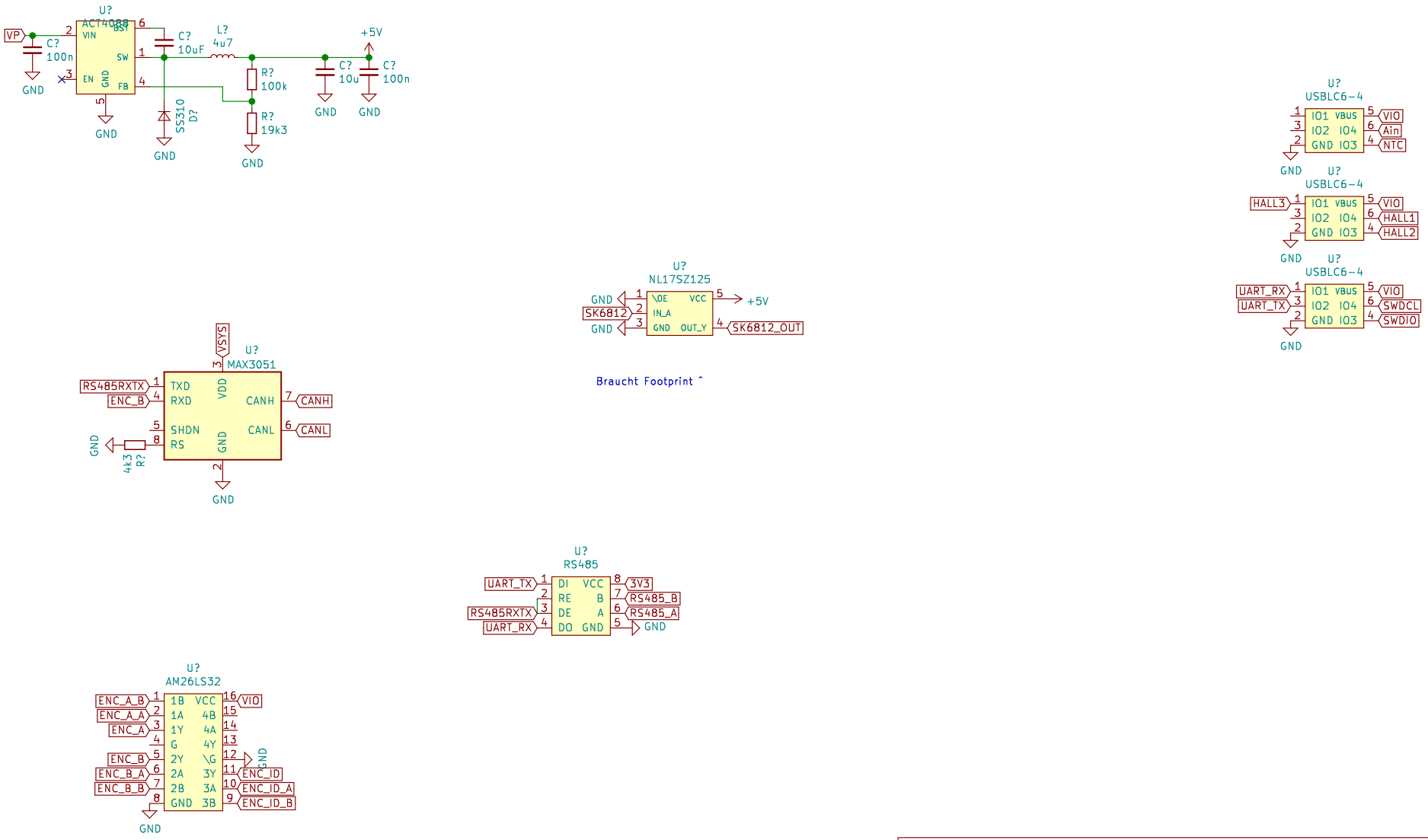

Sheet: /ESD and other ICs/
File: IC.sch

Title:

Size: A4	Date:	Rev:
KiCad E.D.A. kicad 5.1.0		Id: 3/3