NTMFS6H800N 80V 203A 2.3mOhm 4.99€
NTMFS6B03N 100V 132A 4.8mOhm 5.77€
AON6276 80V 100A 2.6mOhm 0.8€

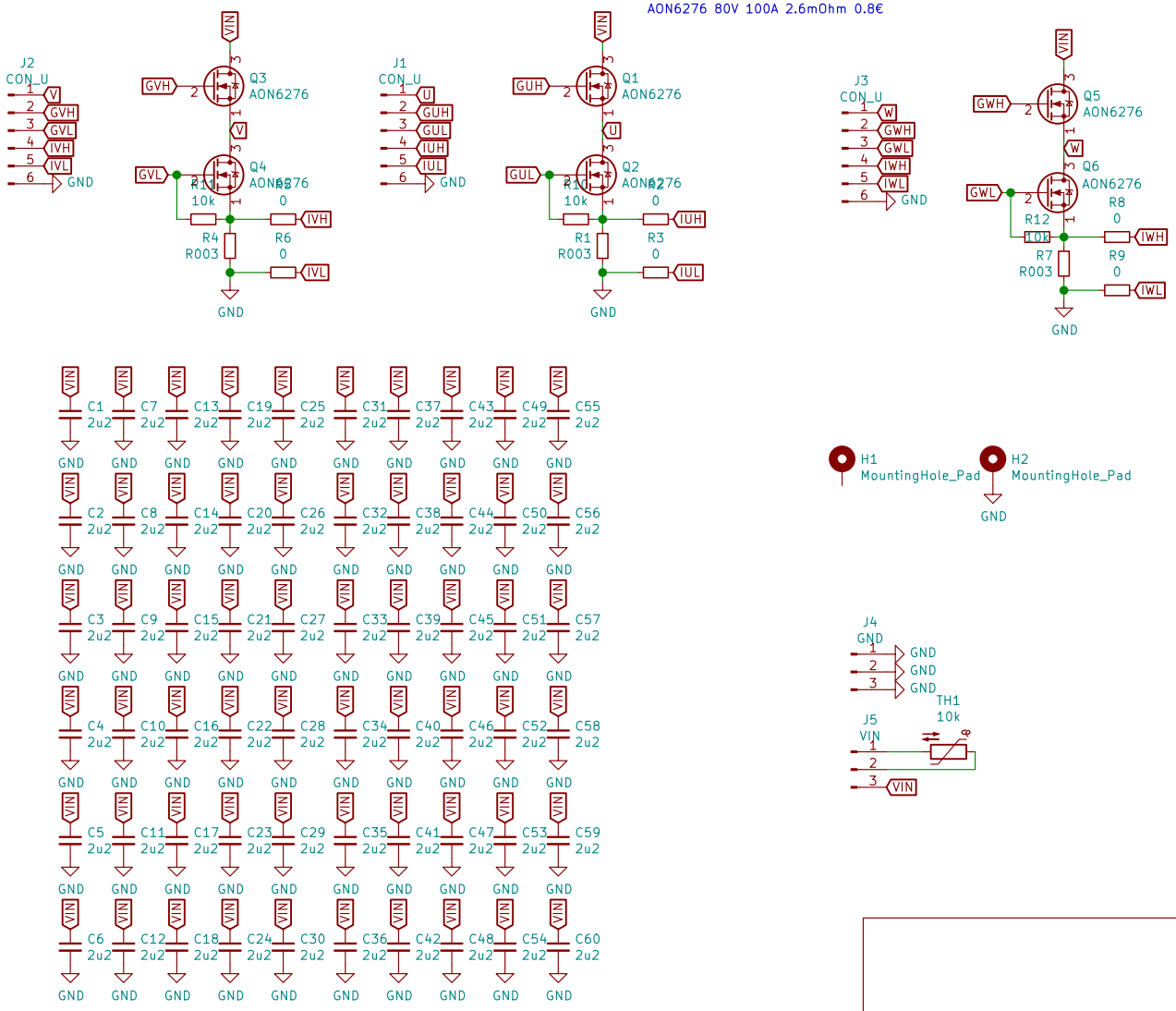

Sheet: /
File: AluPCB.sch

Title:

Size: A4	Date:	Rev:
KiCad E.D.A. kicad 5.1.4+dfsg1-1		Id: 1/1