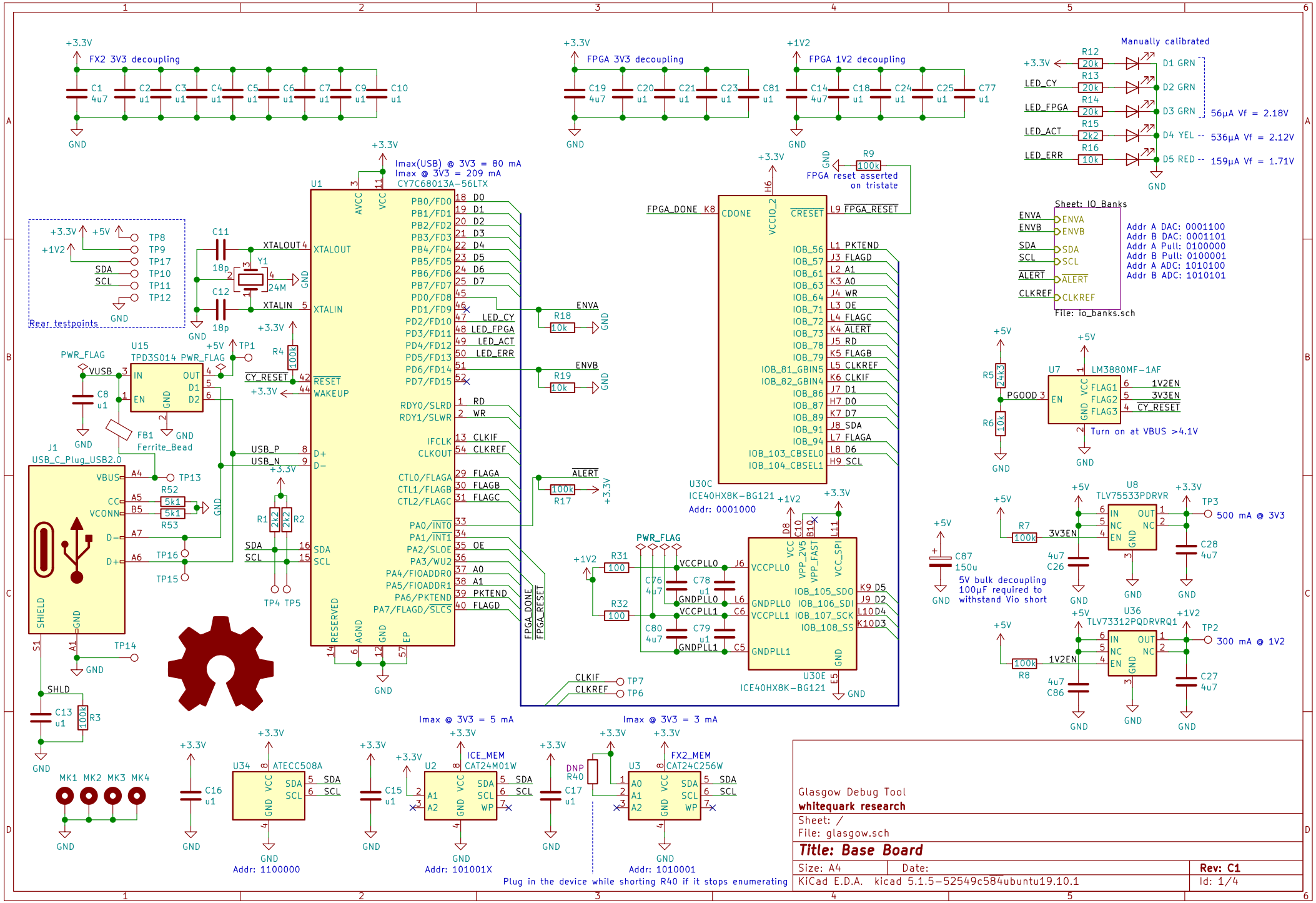
FX2 3V3 decoupling
FPGA 3V3 decoupling
FPGA 1V2 decoupling
Manually calibrated
D1 GRN
D2 GRN
D3 GRN
D4 YEL
D5 RED
56µA Vf = 2.18V
536µA Vf = 2.12V
159µA Vf = 1.71V
Imax(USB) @ 3V3 = 80 mA
Imax @ 3V3 = 209 mA
CY7C68013A-56LTX
FPGA reset asserted on tristate
Sheet: IO_Banks
Addr A DAC: 0001100
Addr B DAC: 0001101
Addr A Pull: 0100000
Addr B Pull: 0100001
Addr A ADC: 1010100
Addr B ADC: 1010101
File: io_banks.sch
Rear testpoints
TPD3S014
LM3880MF-1AF
Turn on at VBUS >4.1V
TLV75533PDRVR
500 mA @ 3V3
TLV73312PQDRVRQ1
300 mA @ 1V2
5V bulk decoupling 100µF required to withstand Vio short
ICE40HX8K-BG121
Addr: 0001000
Imax @ 3V3 = 5 mA
Imax @ 3V3 = 3 mA
ATECC508A
Addr: 1100000
ICE_MEM CAT24M01W
Addr: 101001X
FX2_MEM CAT24C256W
Addr: 1010001
Plug in the device while shorting R40 if it stops enumerating
Glasgow Debug Tool
whitequark research
Sheet: /
File: glasgow.sch
Title: Base Board
Size: A4
Date:
Rev: C1
KiCad E.D.A. kicad 5.1.5-52549c584ubuntu19.10.1
Id: 1/4

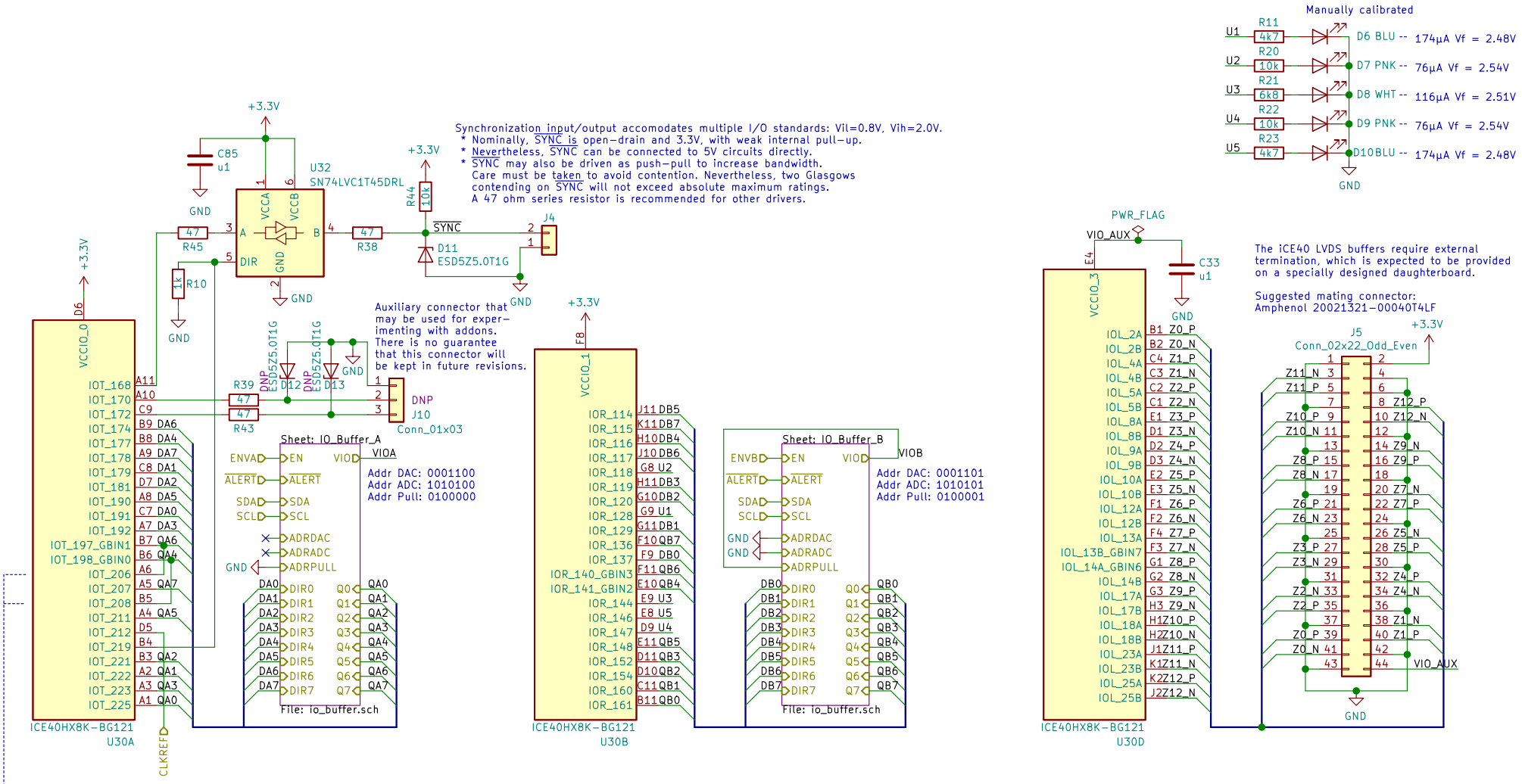

Glasgow debug tool
whitequark research
Sheet: /IO_Banks/
File: io_banks.sch

Title: I/O Banks

Size: A4	Date:	**Rev: C1**
KiCad E.D.A. kicad 5.1.5-52549c584ubuntu19.10.1		Id: 2/4

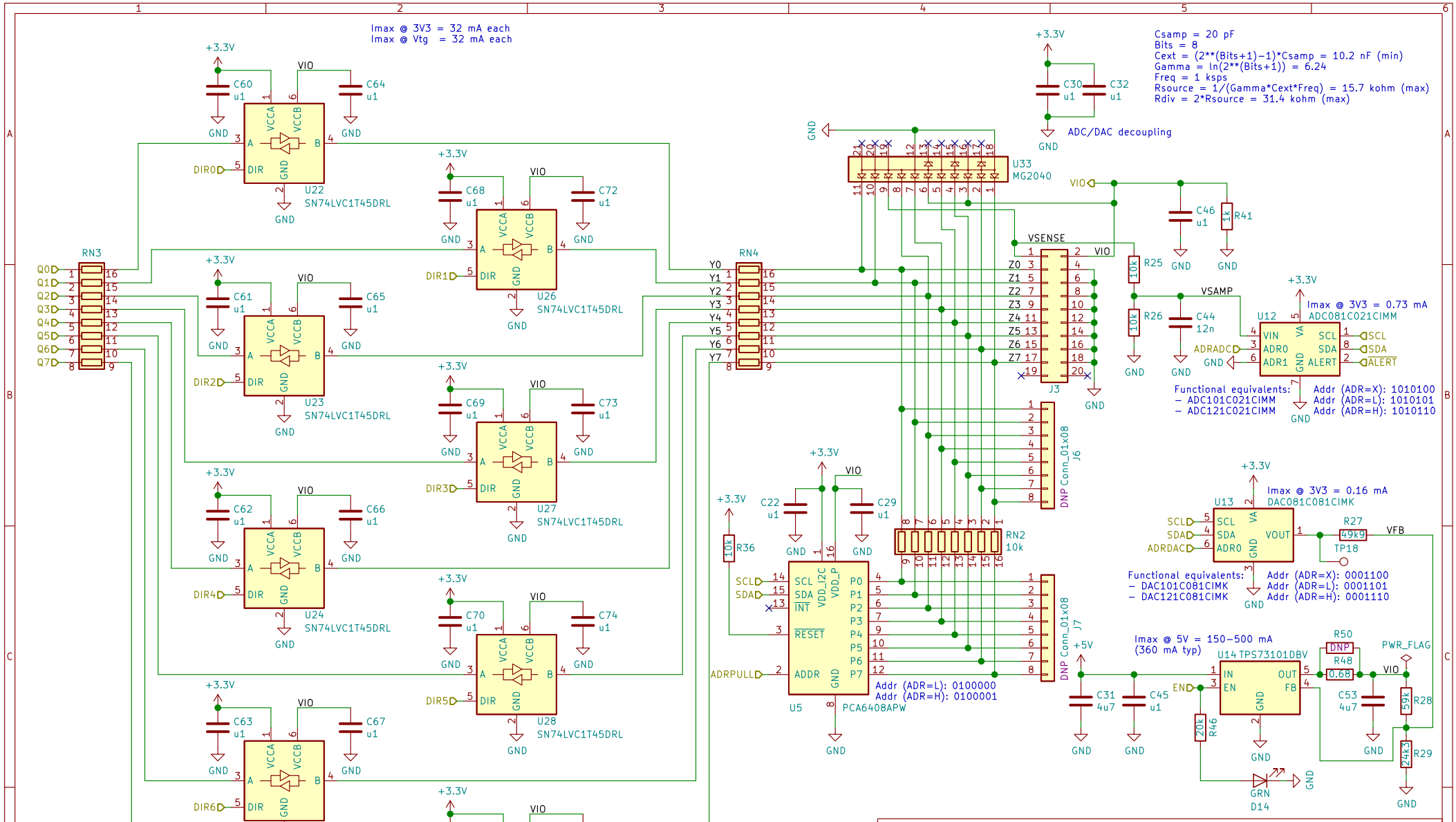
Imax @ 3V3 = 32 mA each
Imax @ Vtg = 32 mA each
Csamp = 20 pF
Bits = 8
Cext = (2**(Bits+1)-1)*Csamp = 10.2 nF (min)
Gamma = ln(2**(Bits+1)) = 6.24
Freq = 1 ksps
Rsource = 1/(Gamma*Cext*Freq) = 15.7 kohm (max)
Rdiv = 2*Rsource = 31.4 kohm (max)
ADC/DAC decoupling
U22 SN74LVC1T45DRL
U23 SN74LVC1T45DRL
U24 SN74LVC1T45DRL
U25 SN74LVC1T45DRL
U26 SN74LVC1T45DRL
U27 SN74LVC1T45DRL
U28 SN74LVC1T45DRL
U29 SN74LVC1T45DRL
U33 MG2040
U12 ADC081C021CIMM
Imax @ 3V3 = 0.73 mA
Functional equivalents:
- ADC101C021CIMM
- ADC121C021CIMM
Addr (ADR=X): 1010100
Addr (ADR=L): 1010101
Addr (ADR=H): 1010110
U13 DAC081C081CIMK
Imax @ 3V3 = 0.16 mA
Functional equivalents:
- DAC101C081CIMK
- DAC121C081CIMK
Addr (ADR=X): 0001100
Addr (ADR=L): 0001101
Addr (ADR=H): 0001110
U5 PCA6408APW
Addr (ADR=L): 0100000
Addr (ADR=H): 0100001
U14 TPS73101DBV
Imax @ 5V = 150-500 mA
(360 mA typ)
DNP Conn_01x08 J6
DNP Conn_01x08 J7
RN2 10k
RN3
RN4
J3
VSENSE
VSAMP
VFB
PWR_FLAG
Calculations by @awygle
Glasgow Debug Tool
whitequark research
Sheet: /IO_Banks/IO_Buffer_B/
File: io_buffer.sch
Title: I/O Buffer
Size: A4
Date:
Rev: C1
KiCad E.D.A. kicad 5.1.5-52549c584ubuntu19.10.1
Id: 3/4

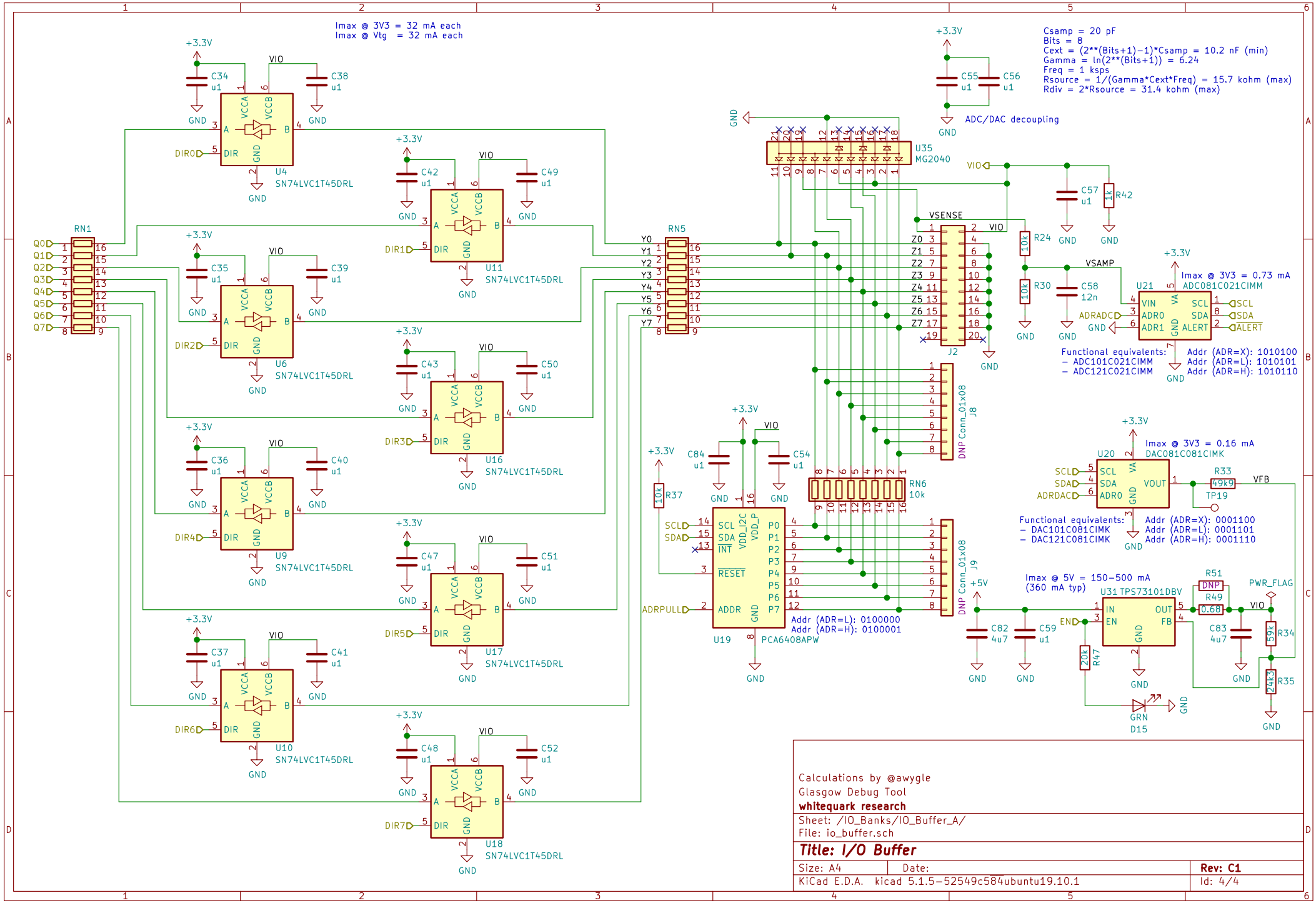
Imax @ 3V3 = 32 mA each
Imax @ Vtg = 32 mA each
Csamp = 20 pF
Bits = 8
Cext = (2**(Bits+1)-1)*Csamp = 10.2 nF (min)
Gamma = ln(2**(Bits+1)) = 6.24
Freq = 1 ksps
Rsource = 1/(Gamma*Cext*Freq) = 15.7 kohm (max)
Rdiv = 2*Rsource = 31.4 kohm (max)
ADC/DAC decoupling
U35 MG2040
RN1
RN5
RN6 10k
U4 SN74LVC1T45DRL
U11 SN74LVC1T45DRL
U6 SN74LVC1T45DRL
U16 SN74LVC1T45DRL
U9 SN74LVC1T45DRL
U17 SN74LVC1T45DRL
U10 SN74LVC1T45DRL
U18 SN74LVC1T45DRL
U19 PCA6408APW
Addr (ADR=L): 0100000
Addr (ADR=H): 0100001
J2
DNP Conn_01x08 J8
DNP Conn_01x08 J9
U21 ADC081C021CIMM
Imax @ 3V3 = 0.73 mA
Functional equivalents:
- ADC101C021CIMM
- ADC121C021CIMM
Addr (ADR=X): 1010100
Addr (ADR=L): 1010101
Addr (ADR=H): 1010110
U20 DAC081C081CIMK
Imax @ 3V3 = 0.16 mA
Functional equivalents:
- DAC101C081CIMK
- DAC121C081CIMK
Addr (ADR=X): 0001100
Addr (ADR=L): 0001101
Addr (ADR=H): 0001110
U31 TPS73101DBV
Imax @ 5V = 150-500 mA
(360 mA typ)
PWR_FLAG
Calculations by @awygle
Glasgow Debug Tool
whitequark research
Sheet: /IO_Banks/IO_Buffer_A/
File: io_buffer.sch
Title: I/O Buffer
Size: A4
Date:
Rev: C1
KiCad E.D.A. kicad 5.1.5-52549c584ubuntu19.10.1
Id: 4/4