Left view
Scale: 1:2

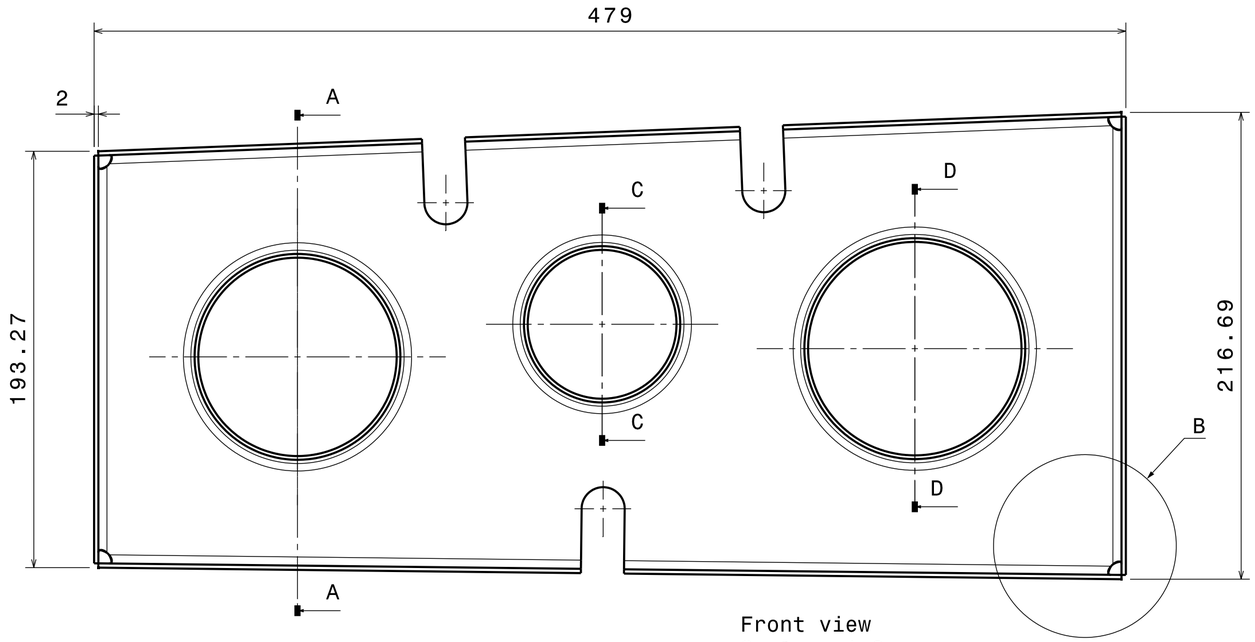

Front view
Scale: 1:2

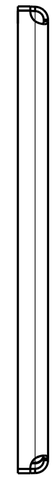

Right view
Scale: 1:2

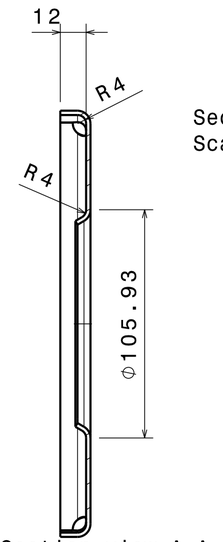

Section view A-A
Scale: 1:2

Section view C-C
Scale: 1:2

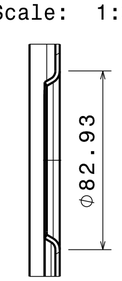

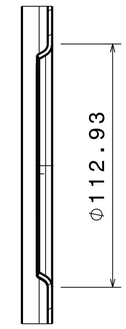

Section view D-D
Scale: 1:2

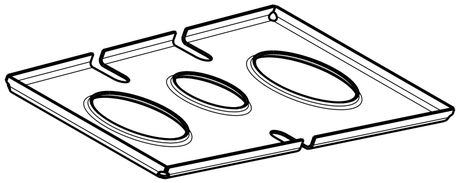

Isometric view
Scale: 1:4

Bottom view
Scale: 1:2

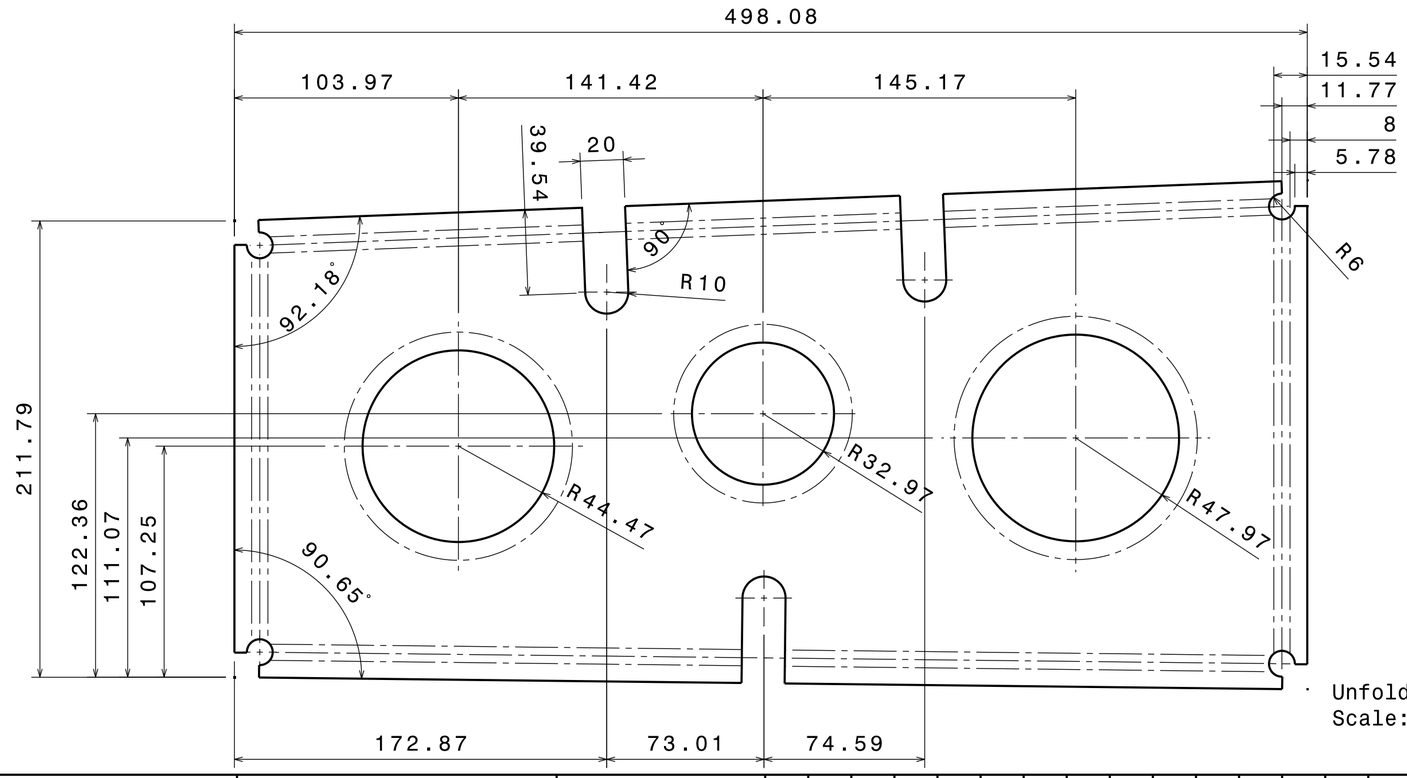

Unfolded view
Scale: 1:2

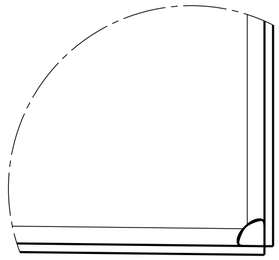

Detail B
Scale: 1:1

This drawing is our property. It can't be reproduced or communicated without our written agreement.

Delft University Of Technology

DRAWN BY Jan-Paul	DATE 20/12/2021	DRAWING TITLE Front_Rib_Root			
CHECKED BY Shadab	DATE 20/12/2021	SIZE A2	DRAWING NUMBER		REV X
DESIGNED BY Group A10	DATE 20/12/2021	SCALE 1:2	WEIGHT(kg) 0,18		SHEET 4/5