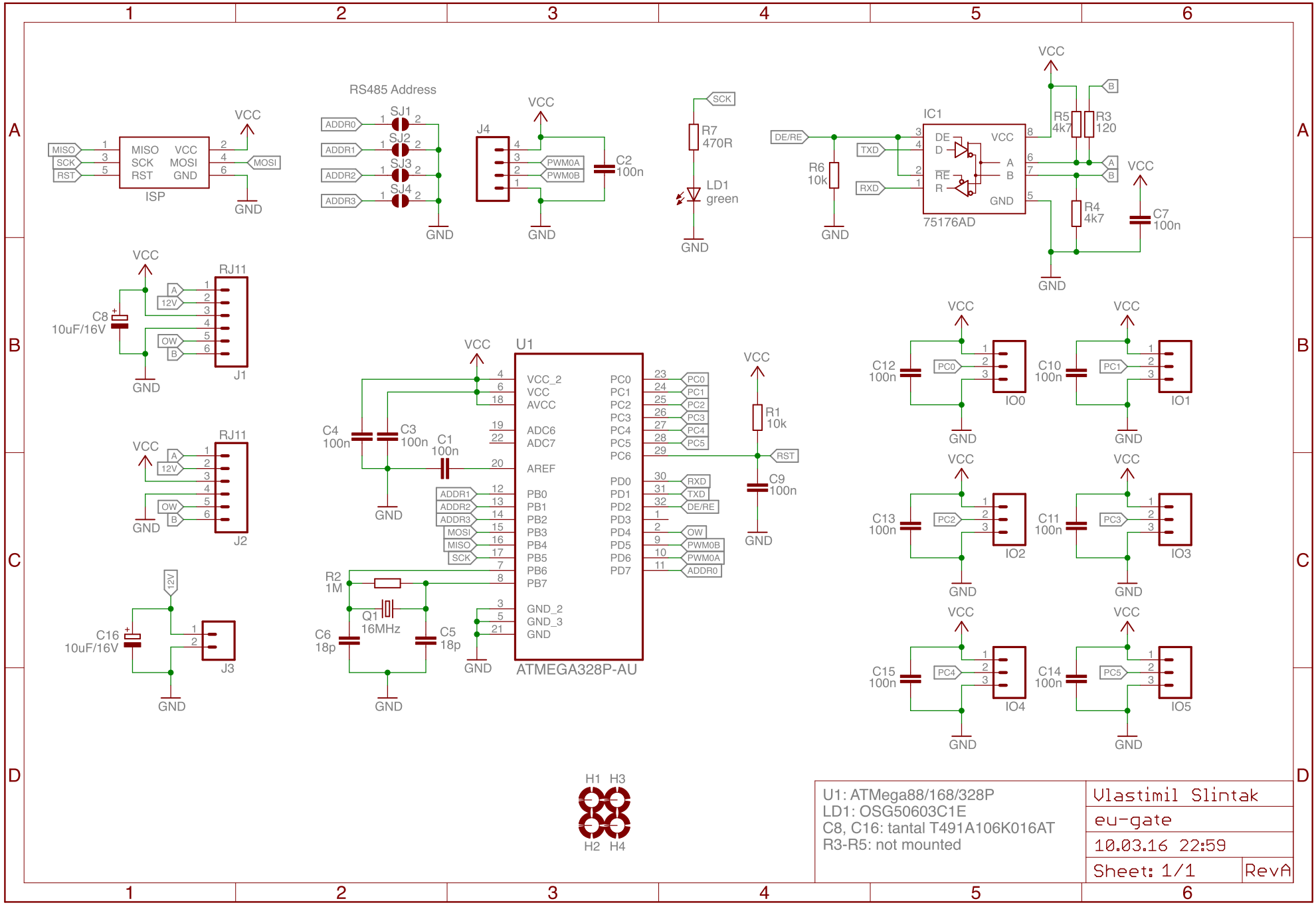
ISP
MISO
SCK
RST
VCC
MOSI
GND
RS485 Address
SJ1
SJ2
SJ3
SJ4
ADDR0
ADDR1
ADDR2
ADDR3
J4
PWM0A
PWM0B
C2
100n
R7
470R
LD1
green
IC1
75176AD
DE/RE
TXD
RXD
R6
10k
R5
4k7
R3
120
R4
4k7
C7
100n
RJ11
J1
J2
J3
C8
10uF/16V
C16
10uF/16V
12V
OW
U1
ATMEGA328P-AU
C4
100n
C3
100n
C1
100n
R2
1M
Q1
16MHz
C6
18p
C5
18p
R1
10k
C9
100n
RST
IO0
IO1
IO2
IO3
IO4
IO5
C12
C10
C13
C11
C15
C14
PC0
PC1
PC2
PC3
PC4
PC5
H1
H2
H3
H4
U1: ATMega88/168/328P
LD1: OSG50603C1E
C8, C16: tantal T491A106K016AT
R3-R5: not mounted
Vlastimil Slintak
eu-gate
10.03.16 22:59
Sheet: 1/1
RevA