EtherCAT for Factory Networking

EtherCAT Automation Protocol (EAP)

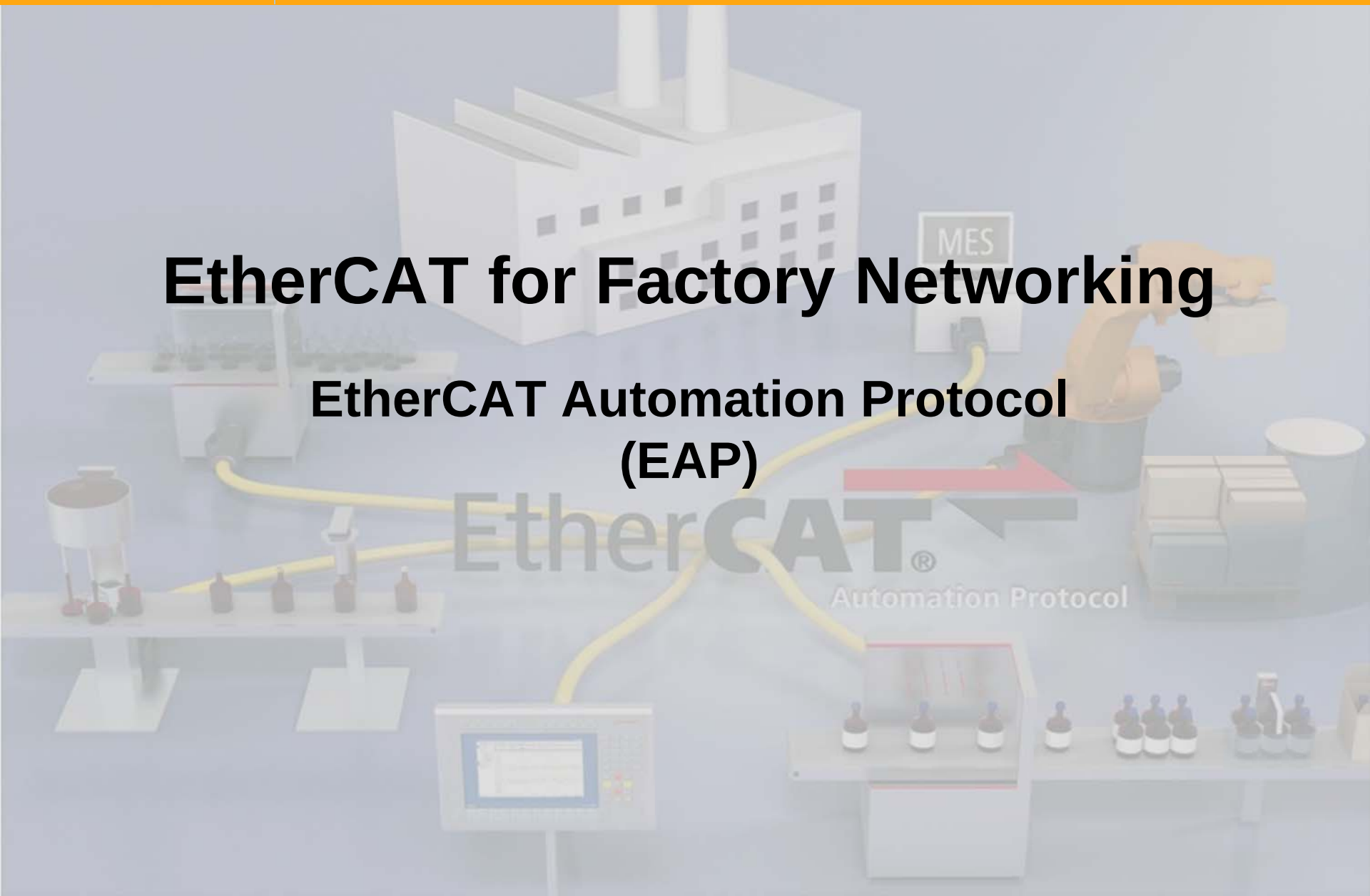

Content

System Architecture
| Fieldbus Network
| Factory Network

ECAT Automation Protocol
| Protocol

Process Data Communication
| Transfer Modes
| Process Data Structure

Mailbox Communikation
| Mailbox Data Structure
| Object Dictionaries

Conclusion

1. System Architecture
   - Fieldbus Network (EtherCAT)
   - Factory Network (EtherCAT Automation Protocol)
2. EAP | EtherCAT Automation Protocol
   - Protocol
3. EAP | Process Data Communication
   - Transfer Modes
   - Process Data Structure
4. EAP | Mailbox Communication
   - Mailbox Data Structure
   - Object Dictionaries

© EtherCAT Technology Group

EtherCAT | Versatile System Architecture

System Architecture
| Fieldbus Network
| Factory Network

ECAT Automation Protocol
| Protocol

Process Data Communication
| Transfer Modes
| Process Data Structure

Mailbox Communikation
| Mailbox Data Structure
| Object Dictionaries

Conclusion

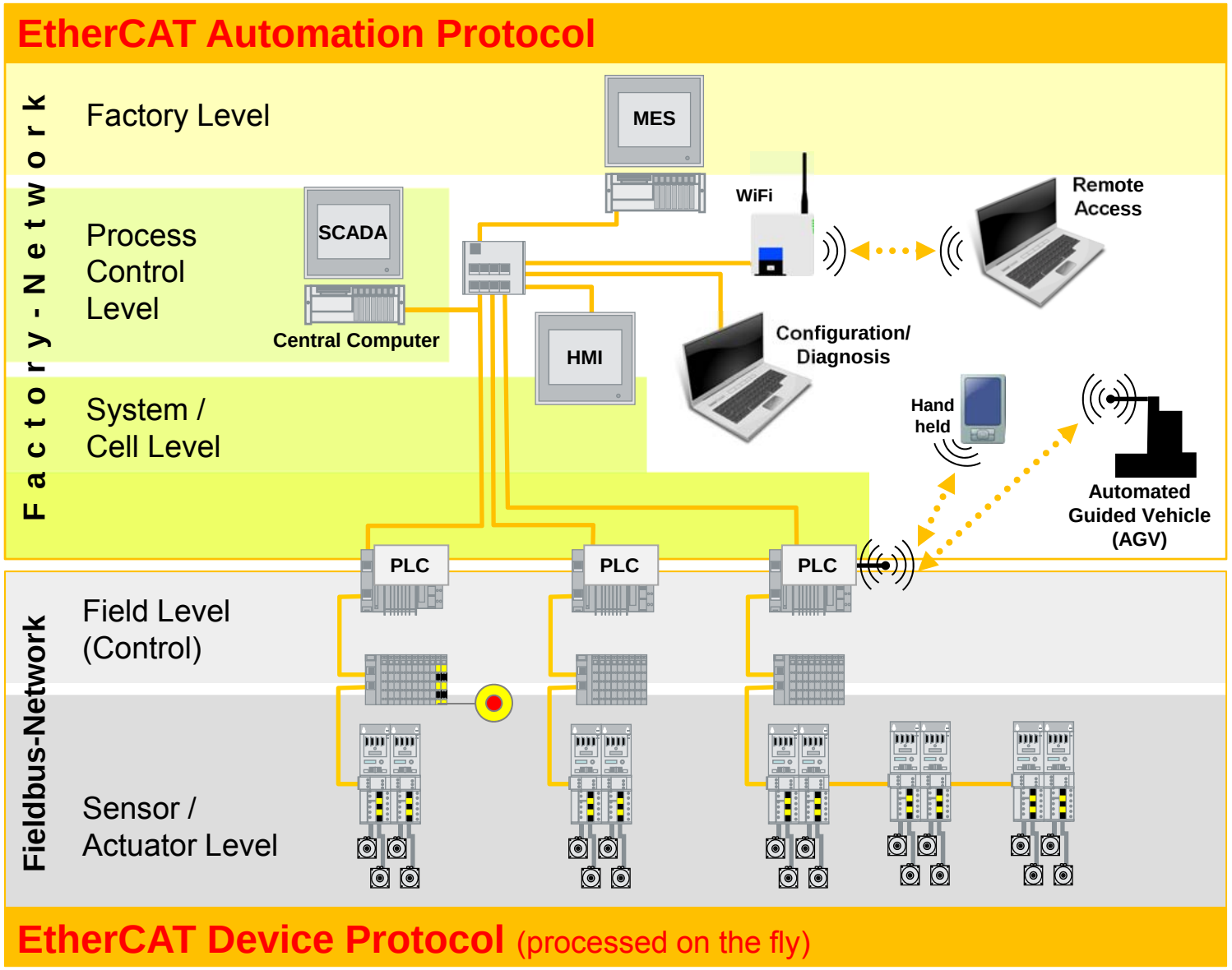

© EtherCAT Technology Group

Fieldbus Network Requirements

System Architecture
| Fieldbus Network
| Factory Network
ECAT Automation Protocol
| Protocol
Process Data Communication
| Transfer Modes
| Process Data Structure
Mailbox Communikation
| Mailbox Data Structure
| Object Dictionaries
Conclusion

- Hard Real-Time
  - Fast Cycle Times within µs
  - Precise Synchronization
- Flexible Topology
  - Line, Tree, Star, Daisy Chain…
- Standard Ethernet Cabling, Cost Effective Components
- Master-Slave & Slave-Slave Communication

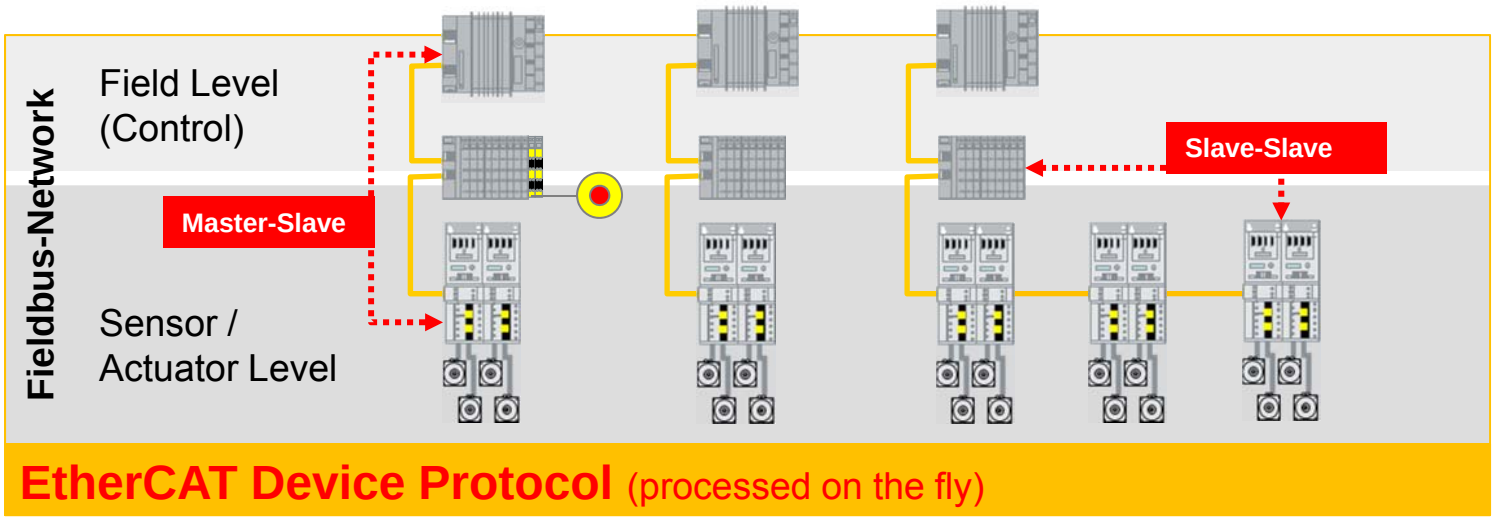

© EtherCAT Technology Group

Fieldbus | EtherCAT Device Protocol

System Architecture
| Fieldbus Network
| Factory Network

ECAT Automation Protocol
| Protocol

Process Data Communication
| Transfer Modes
| Process Data Structure

Mailbox Communikation
| Mailbox Data Structure
| Object Dictionaries

Conclusion

- Well known „EtherCAT“ Protocol
- Open Protocol: ISO, IEC and SEMI Standard
- Used at field level within machines
  e.g. for I/O, Motion, Measurement, Robotics
- Outstanding Features, e.g.:
  - ✓ Hard Real-Time
    Protocol is processed in hardware (ESC)
    - ✓ Fast Cycle Times (<100µs)
    - ✓ Precise Synchronization (<100ns)
  - ✓ Flexible Topologies
  - ✓ Standard Ethernet Cabling, Cost Effective Components
- EtherCAT Frame Type = 1

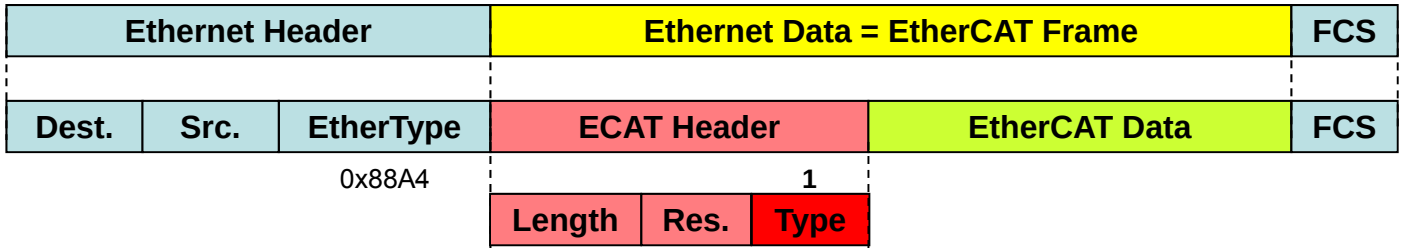

© EtherCAT Technology Group

Factory Network Requirements

System Architecture
| Fieldbus Network
| Factory Network
ECAT Automation Protocol
| Protocol
Process Data Communication
| Transfer Modes
| Process Data Structure
Mailbox Communikation
| Mailbox Data Structure
| Object Dictionaries
Conclusion

EtherCAT Automation Protocol

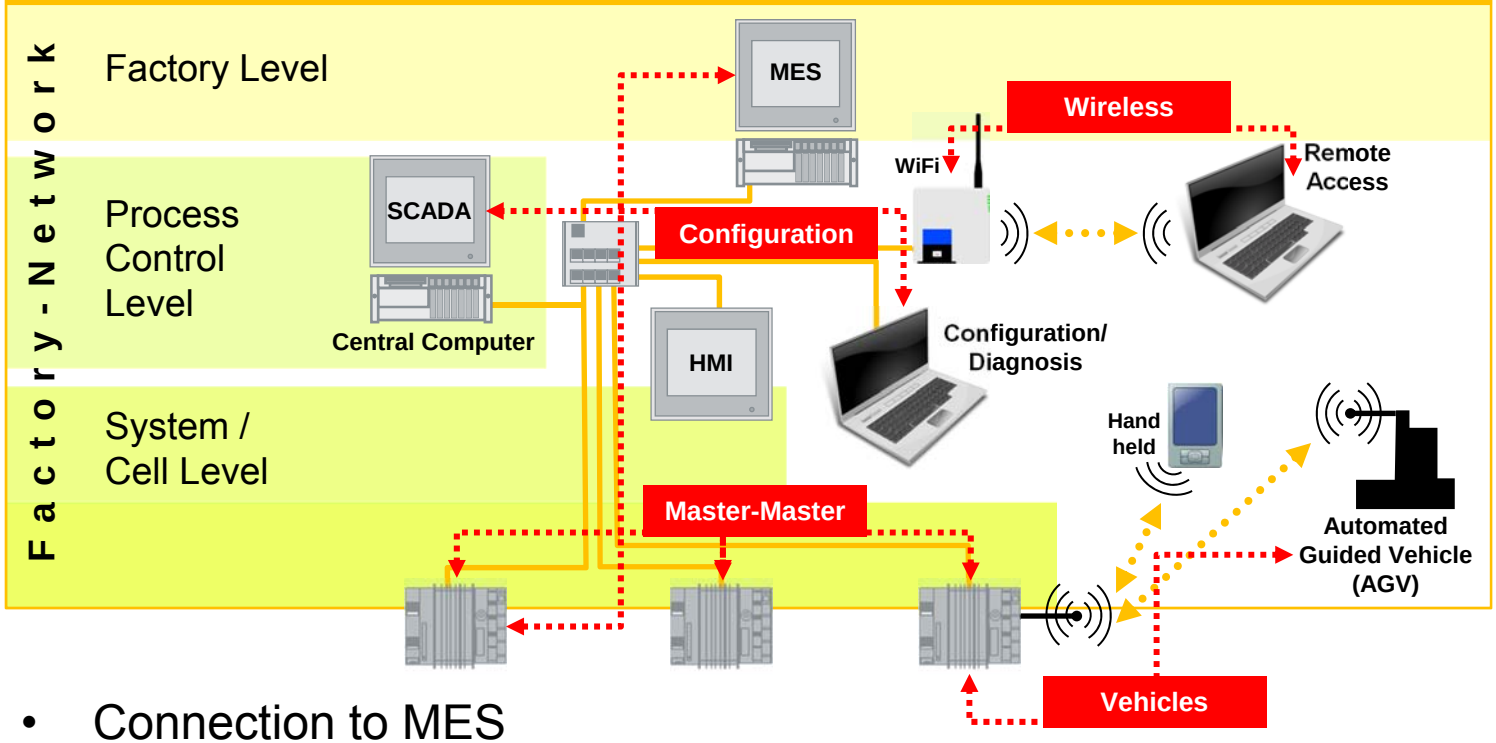

- Connection to MES
- Configuration/Diagnosis, also Wireless
- Control/Visualization
- Standard Ethernet Infrastructure Components
- Vehicles/Logistics
- Master-Master Communication

© EtherCAT Technology Group

Factory Network Requirements

System Architecture
| Fieldbus Network
| Factory Network
ECAT Automation Protocol
| Protocol
Process Data Communication
| Transfer Modes
| Process Data Structure
Mailbox Communikation
| Mailbox Data Structure
| Object Dictionaries
Conclusion

- Constraints:
  - Standard Ethernet interfaces and infrastructure devices
  - Diagnosis and Configuration
  - No strict requirements regarding cycle time and synchronization
  - Cycle time in the range of milliseconds

© EtherCAT Technology Group

Factory Network Requirements

System Architecture
| Fieldbus Network
| Factory Network
ECAT Automation Protocol
| Protocol
Process Data Communication
| Transfer Modes
| Process Data Structure
Mailbox Communikation
| Mailbox Data Structure
| Object Dictionaries
Conclusion

- Communication between:
  - EtherCAT Master Devices (Master-Master Communication)
  - EtherCAT Master and Visualization, Configuration Tool (also via Remote Access)
- Access to devices in underlying EtherCAT segments from the control level
- Access from configuration tools:
  - Configuration of the Master-Master communication
  - Configuration of underlying sub-devices (e.g. Drives, Gateways,…)
  - Routing through EtherCAT Master

© EtherCAT Technology Group

Factory Network Requirements | Services

System Architecture
| Fieldbus Network
| Factory Network

ECAT Automation Protocol
| Protocol

Process Data Communication
| Transfer Modes
| Process Data Structure

Mailbox Communikation
| Mailbox Data Structure
| Object Dictionaries

Conclusion

Service	Required Mechanism			
	PD	MBX	R	OD
Master-Master Communication	X			X
External Configuration and Diagnosis		X	X	X
Connection to Main Computer / Controller and MES / ERP Systems	X	X		
Connection to Visualization incluldling Status and Monitoring	X	X		

Abbreviations:

PD	Process Data Communikation (cyclic)
MBX	Mailbox Communikation (acyclic)
R	Routing
OD	Object Dictionary

EtherCAT Automation Protocol

System Architecture
| Fieldbus Network
| Factory Network

ECAT Automation Protocol
| Protocol

Process Data Communication
| Transfer Modes
| Process Data Structure

Mailbox Communikation
| Mailbox Data Structure
| Object Dictionaries

Conclusion

- ✓ EtherCAT Automation Protocol (EAP) achieves all these requirements
- ✓ EAP is an enhancement of the EtherCAT technology

IEC61158, Part 12: *EtherCAT Specification*	• Protocols • Frame Structure
ETG.1005: *EAP Specification*	• Configuration Structure • Network Management Functions

- ✓ EAP offers services for communication at control level and thus for **complete factory networking**

© EtherCAT Technology Group

EAP | Example Application

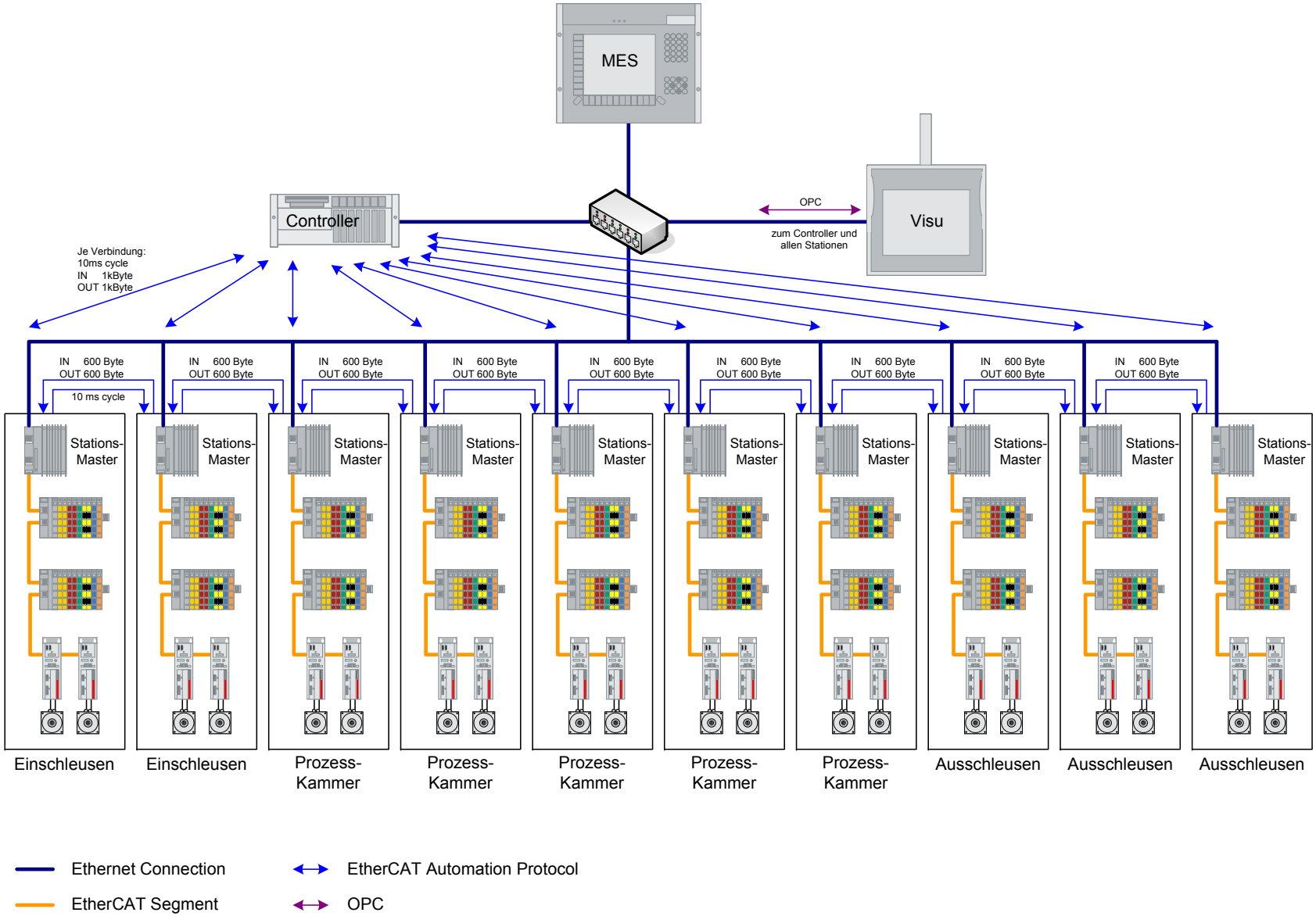

© EtherCAT Technology Group

EAP | Protocol Transmission

System Architecture
| Fieldbus Network
| Factory Network

ECAT Automation Protocol
| Protocol

Process Data Communication
| Transfer Modes
| Process Data Structure

Mailbox Communikation
| Mailbox Data Structure
| Object Dictionaries

Conclusion

- **Flexible** Protocol Transmission:

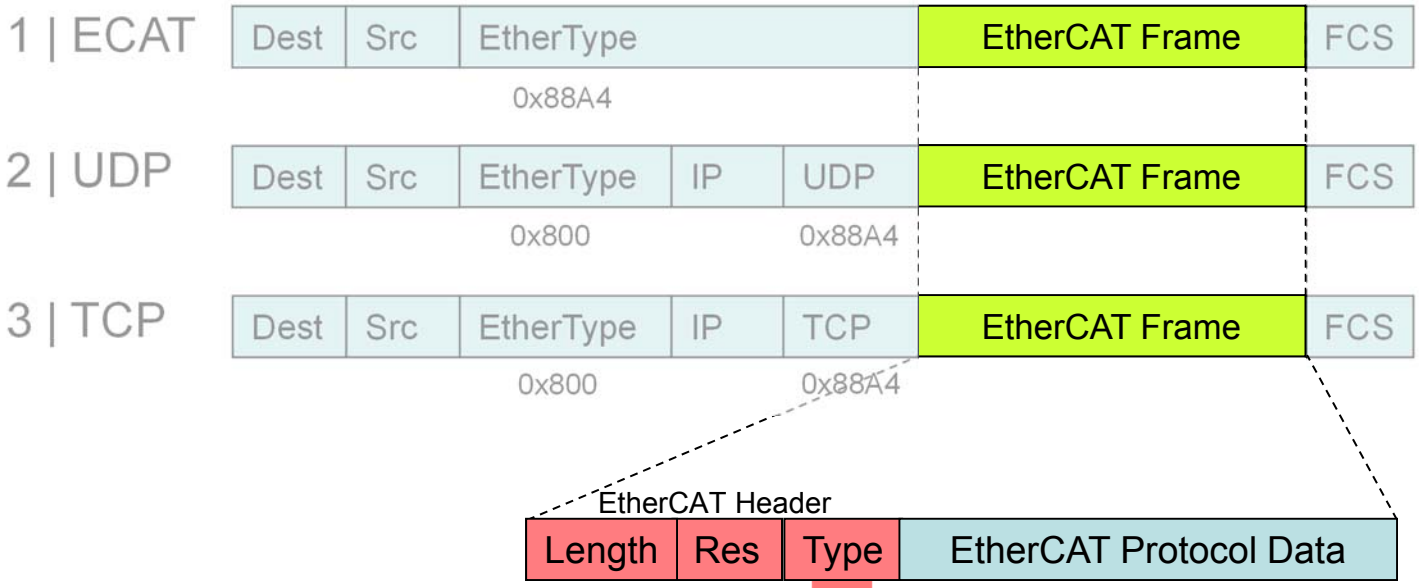

- **Standard** EtherCAT Frame Header
- **Standard** Frame Structure

Type 1	EtherCAT Device Protocol
Type 4	EAP Process Data
Type 5	EAP Mailbox Data

© EtherCAT Technology Group

EAP | Process Data Communication

System Architecture
| Fieldbus Network
| Factory Network

ECAT Automation Protocol
| Protocol

Process Data Communication
| Transfer Modes
| Process Data Structure

Mailbox Communikation
| Mailbox Data Structure
| Object Dictionaries

Conclusion

- EAP Process Data communication is used for cyclic data exchange
- An EtherCAT Master can publish information and can receive information from other Master devices
- Two transfer modes
  - Pushed Data Exchange (Broadcast)
  - Polled Data Exchange

© EtherCAT Technology Group

Process Data | Pushed Data Exchange

System Architecture
| Fieldbus Network
| Factory Network

ECAT Automation Protocol
| Protocol

Process Data Communication
| Transfer Modes
| Process Data Structure

Mailbox Communikation
| Mailbox Data Structure
| Object Dictionaries

Conclusion

- Pushed Data Exchange **(Broadcast)**
  - each node can send information with its own cycle
  - all nodes are able to reveice information from each other

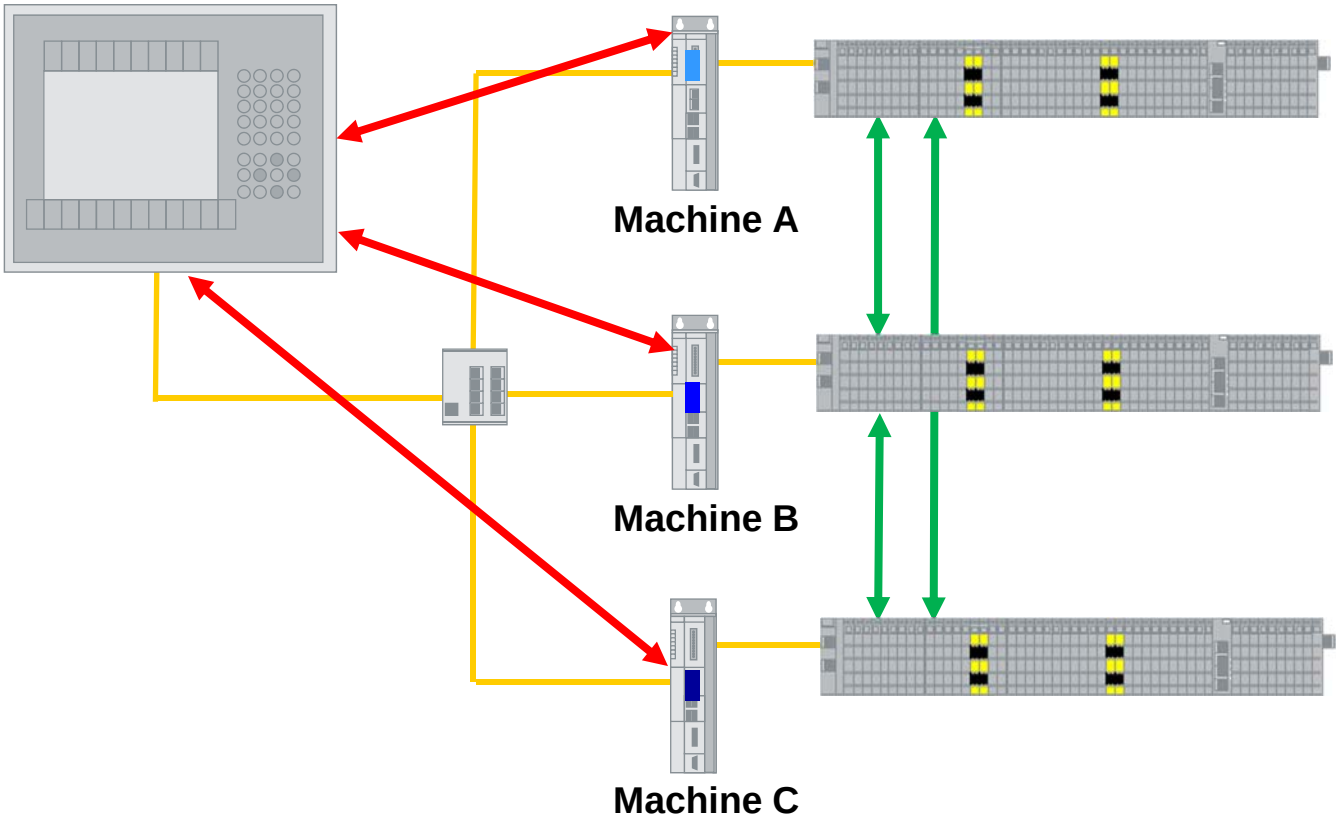

© EtherCAT Technology Group

Process Data | Polled Data Exchange

System Architecture
| Fieldbus Network
| Factory Network

ECAT Automation Protocol
| Protocol

Process Data Communication
| Transfer Modes
| Process Data Structure

Mailbox Communikation
| Mailbox Data Structure
| Object Dictionaries

Conclusion

- Polled Data Exchange **(1:1 Connection)**
  - One device sends cyclically its information (Client)
  - Each addressed device (Server) responses with its telegram

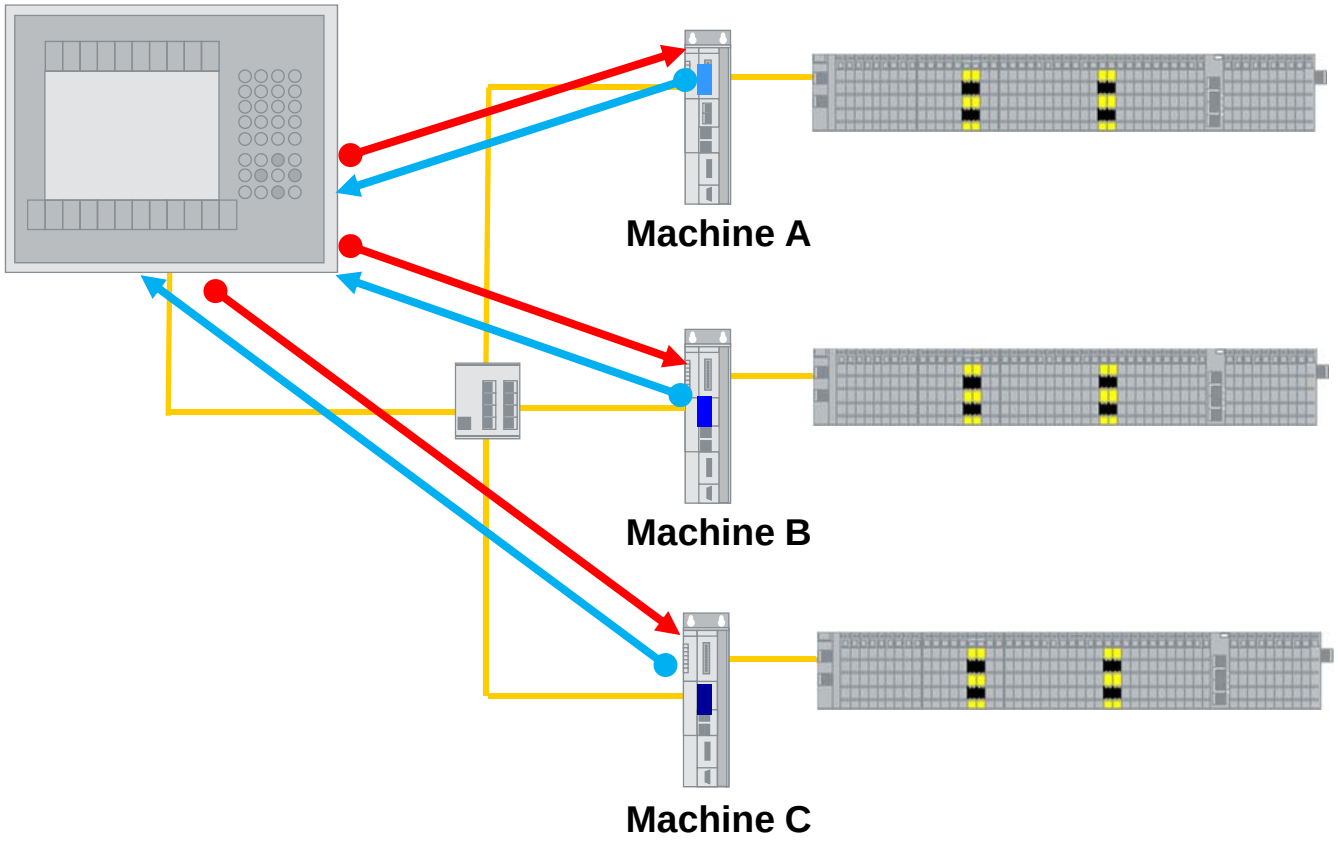

© EtherCAT Technology Group

Process Data | Polled Data Exchange

System Architecture
| Fieldbus Network
| Factory Network

ECAT Automation Protocol
| Protocol

Process Data Communication
| Transfer Modes
| Process Data Structure

Mailbox Communikation
| Mailbox Data Structure
| Object Dictionaries

Conclusion

- Polled Data Exchange **(1:n Connection)**
  - One device sends cyclically its information (Client)
  - One or many devices (Server) response with their telegram
  - Soft Synchronization of devices

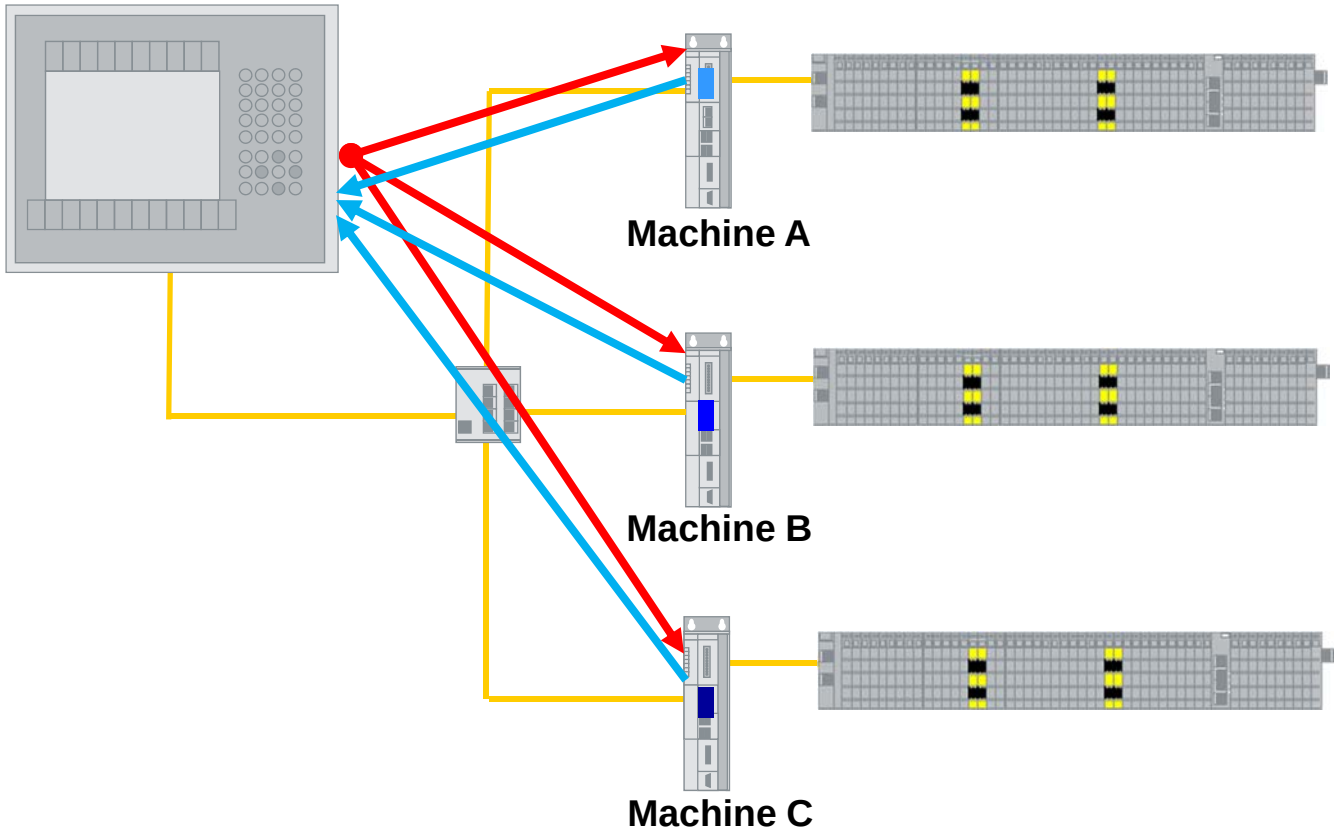

© EtherCAT Technology Group

Process Data | Frame Structure

System Architecture
| Fieldbus Network
| Factory Network

ECAT Automation Protocol
| Protocol

Process Data Communication
| Transfer Modes
| Process Data Structure

Mailbox Communikation
| Mailbox Data Structure
| Object Dictionaries

Conclusion

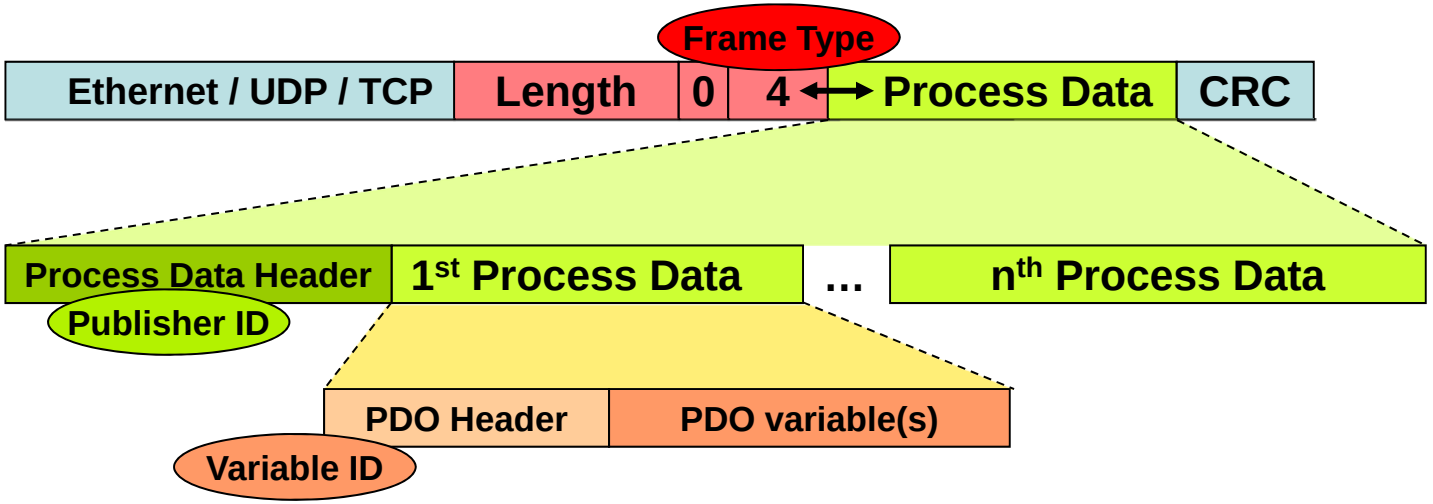

- EtherCAT Header: ***EtherCAT Frame Type*** = 4
- ***Telegram*** consists of one or several ***Process Data***
- ***Process Data*** consist of one or several ***PDOs***
- ***Publisher ID*** = AoE NetID of Publisher
- Each ***PDO*** consists of one or several ***Variables***
- ***Variable ID*** identifies Process Data
  → **Connectionless**
- Cyclic Frames are **configured in advance**

EAP | Mailbox Communication

System Architecture
| Fieldbus Network
| Factory Network

ECAT Automation Protocol
| Protocol

Process Data Communication
| Transfer Modes
| Process Data Structure

Mailbox Communikation
| Mailbox Data Structure
| Object Dictionaries

Conclusion

- EAP Mailbox Communication is used for asynchronous access to the devices
  - Configuration of Process Data
  - Configuration of Device Specific Parameters
  - Diagnosis Information of EtherCAT Slaves

- Standard Mailbox Protocol in Ethernet telegram (Type: 0x88A4) or UDP/TCP Telegram

© EtherCAT Technology Group

Mailbox Data | Frame Structure

System Architecture
| Fieldbus Network
| Factory Network

ECAT Automation Protocol
| Protocol

Process Data Communication
| Transfer Modes
| Process Data Structure

Mailbox Communikation
| Mailbox Data Structure
| Object Dictionaries

Conclusion

- EtherCAT Header: ***EtherCAT Frame Type*** = 5
  - Indicates mailbox communication
- Telegram consists of a ***Mailbox Header*** and ***Mailbox (Protocol) Data***
- For EAP: ***Mailbox Header Type*** = 1 (AoE)
  - Routable protocol to access several object dictionaries
  - ***AoE Header Type***: Mapping of other Mailbox protocols possible

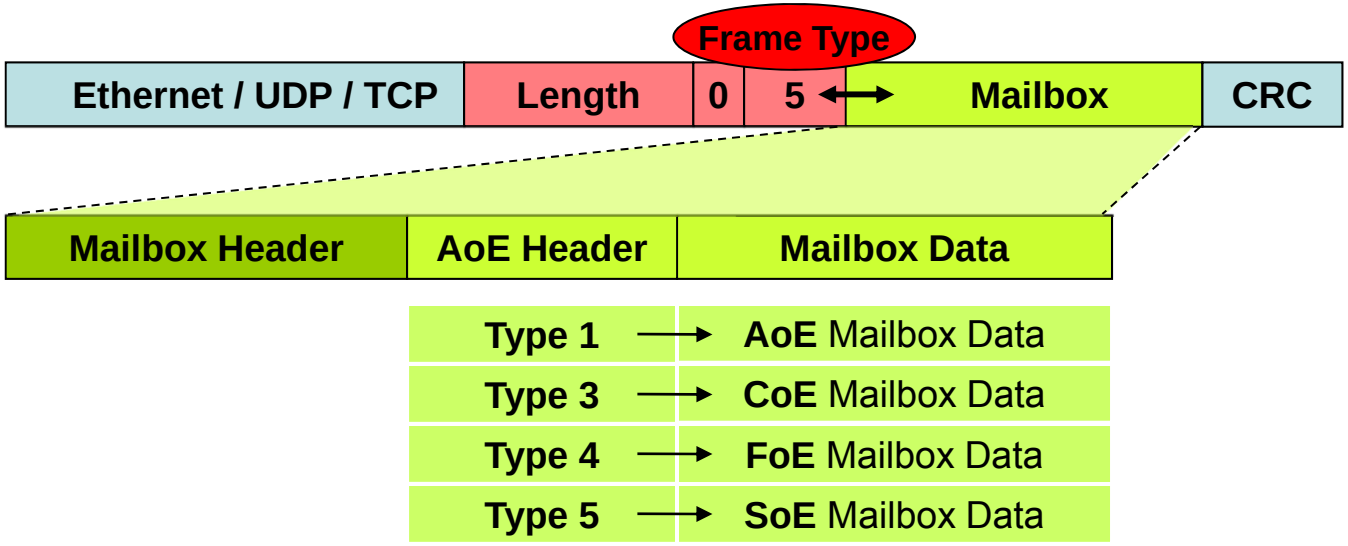

© EtherCAT Technology Group

Object Dictionaries
within EtherCAT Master for Configuration and Routing

System Architecture
| Fieldbus Network
| Factory Network

ECAT Automation Protocol
| Protocol

Process Data Communication
| Transfer Modes
| Process Data Structure

Mailbox Communikation
| Mailbox Data Structure
| Object Dictionaries

Conclusion

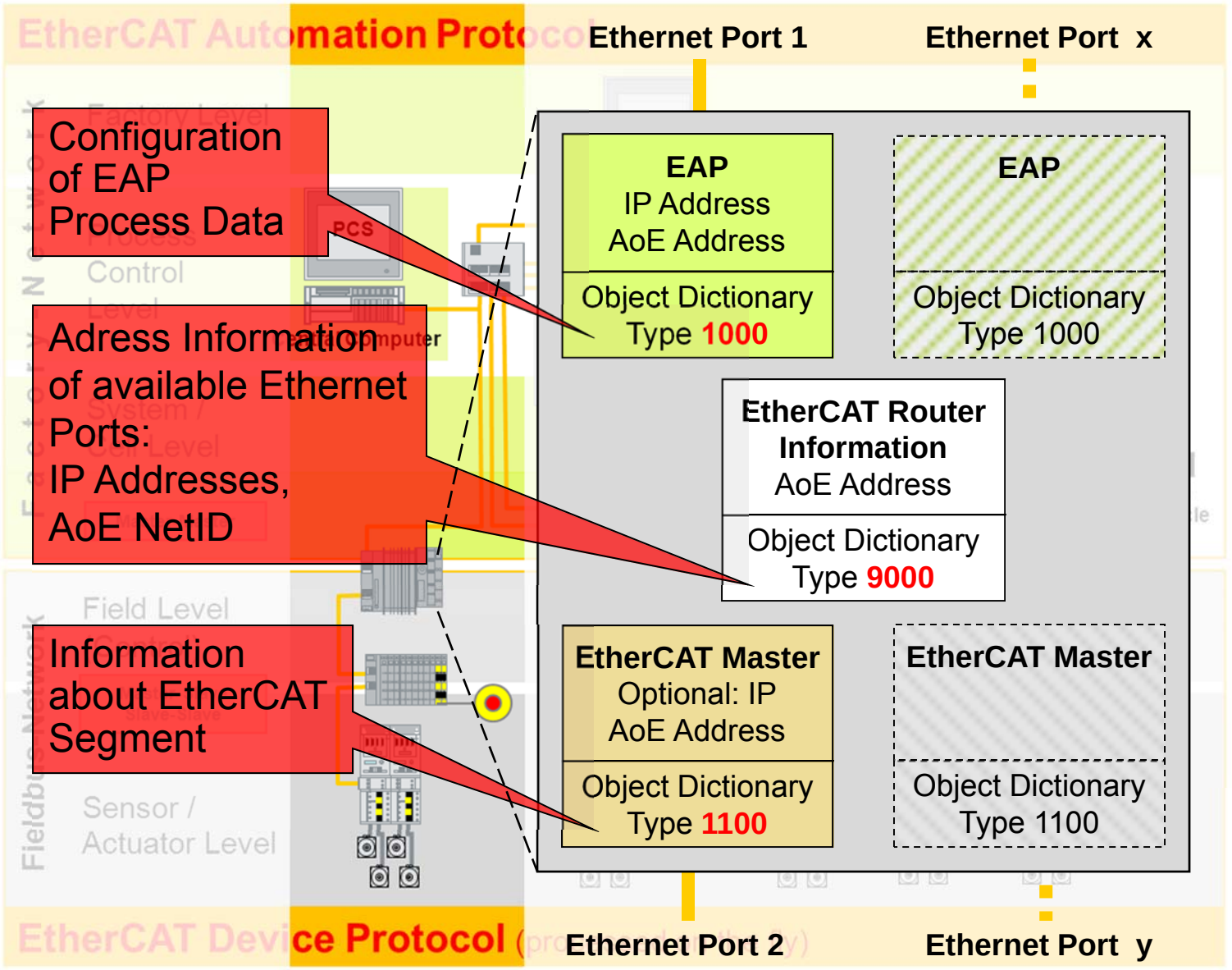

© EtherCAT Technology Group

Access to EtherCAT Slave

System Architecture
| Fieldbus Network
| Factory Network

ECAT Automation Protocol
| Protocol

Process Data Communication
| Transfer Modes
| Process Data Structure

Mailbox Communikation
| Mailbox Data Structure
| Object Dictionaries

Conclusion

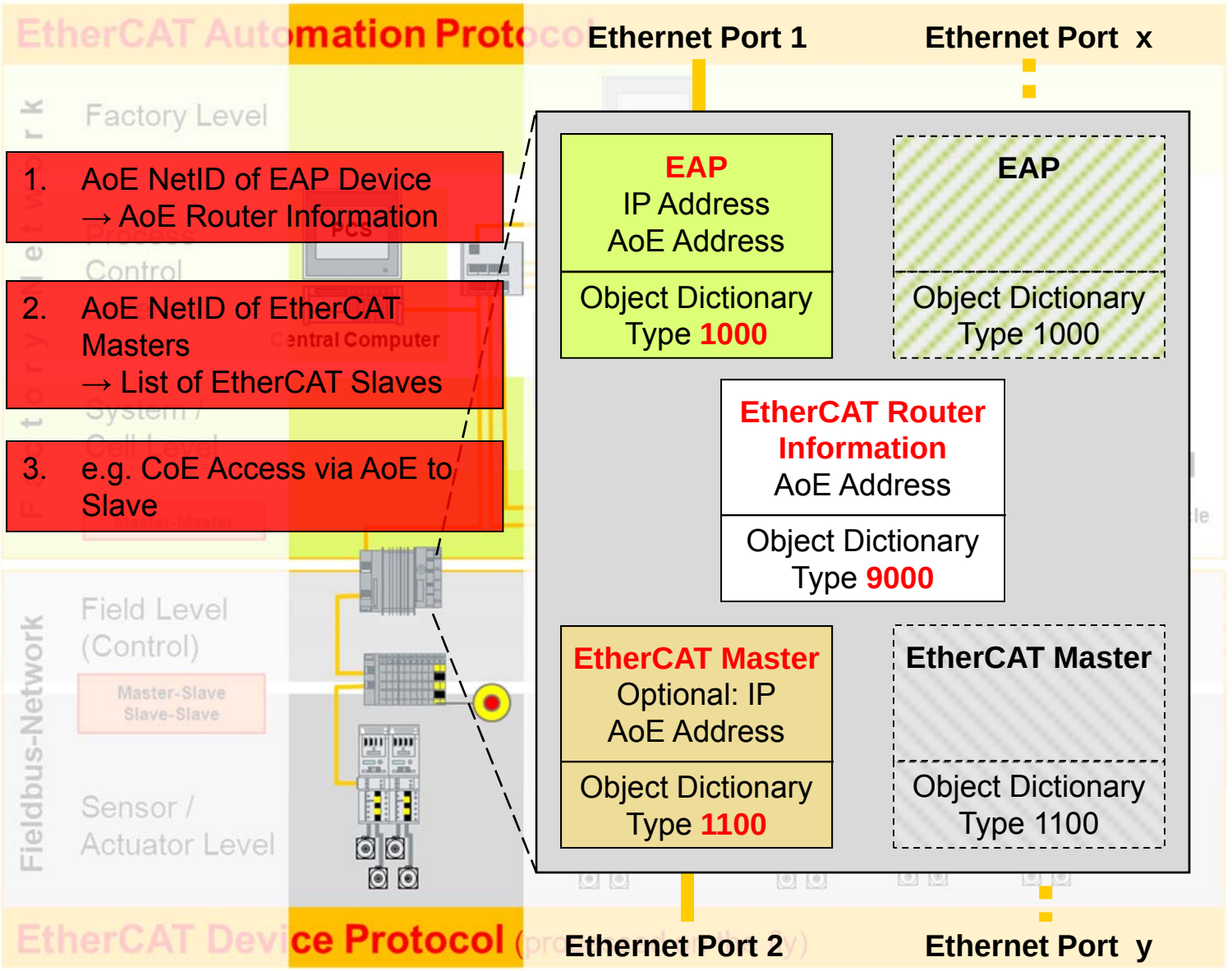

© EtherCAT Technology Group

Conclusion of EAP

System Architecture
| Fieldbus Network
| Factory Network

ECAT Automation Protocol
| Protocol

Process Data Communication
| Transfer Modes
| Process Data Structure

Mailbox Communikation
| Mailbox Data Structure
| Object Dictionaries

Conclusion

- ✓ Master-Master Communication
- ✓ Remote Configuration / Diagnosis
- ✓ Exchange of Process Data and Parameter Data
- ✓ Routing to any device connected
- ✓ Easy vertical integration
- ✓ Integration of wireless device
- ✓ Data Structure equal to EtherCAT Device Protocol
- ✓ IP Addresses only for Control Level – not for Fieldbus Level

➜ EtherCAT is factory networking!

© EtherCAT Technology Group

EtherCAT for Factory Networking

System Architecture
| Fieldbus Network
| Factory Network

ECAT Automation Protocol
| Protocol

Process Data Communication
| Transfer Modes
| Process Data Structure

Mailbox Communikation
| Mailbox Data Structure
| Object Dictionaries

Conclusion

Please visit

www.ethercat.org

for more information

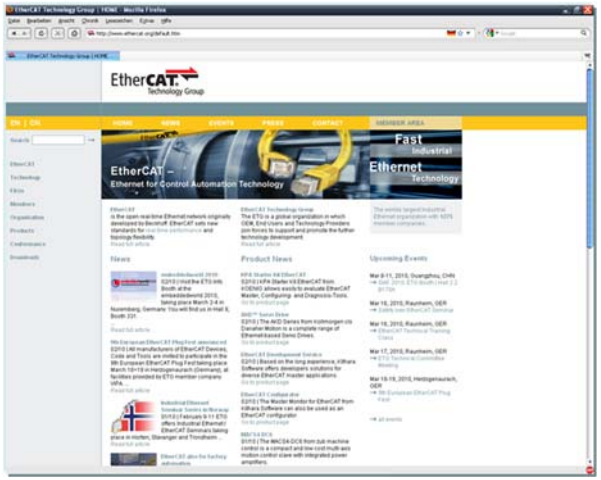

EtherCAT Technology Group Headquarters

Ostendstraße 196
90482 Nuremberg, Germany

Phone: +49 911 54056 20
Fax: +49 911 54056 29
Email: info@ethercat.org