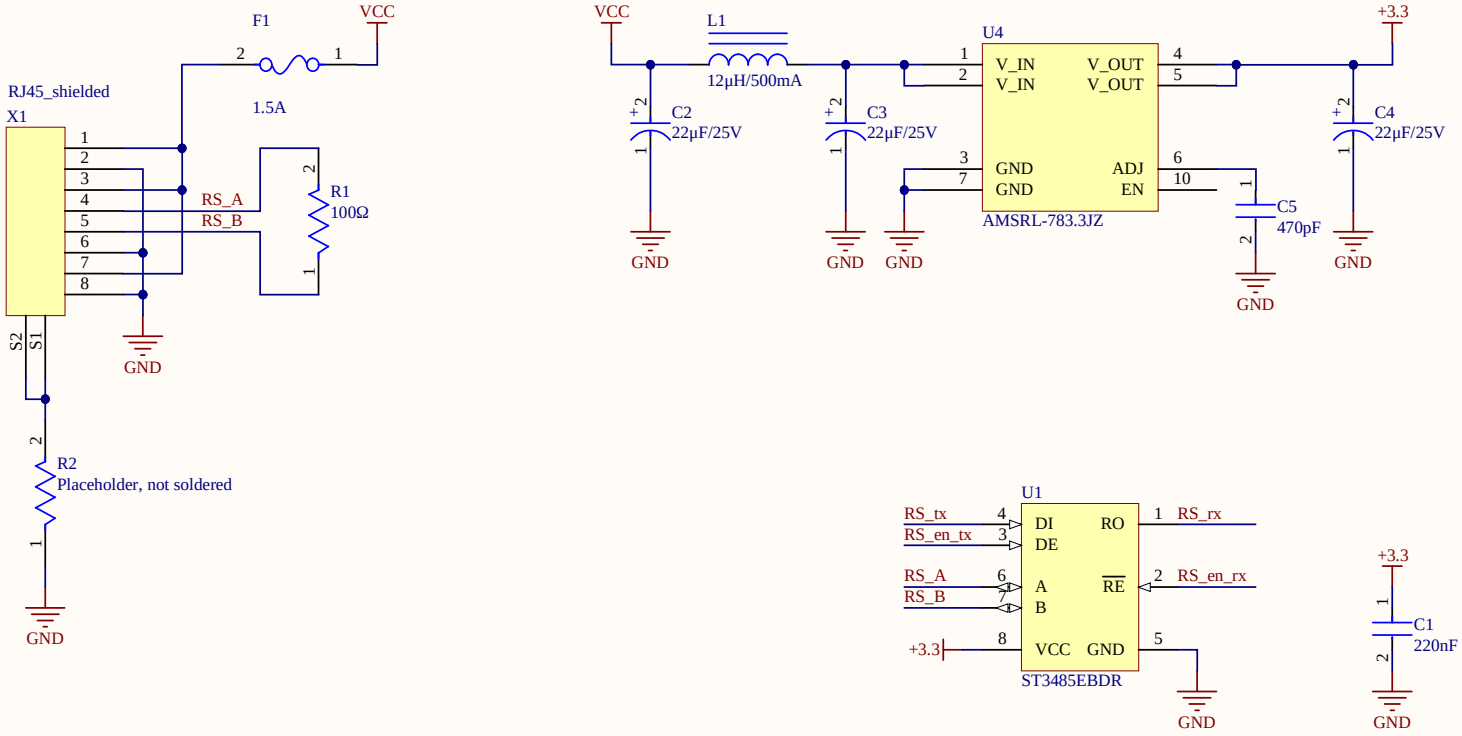

Project:	**Rotary head**
Author:	Jan Olencki
Revision: v1.0	Sheet 1 of 3

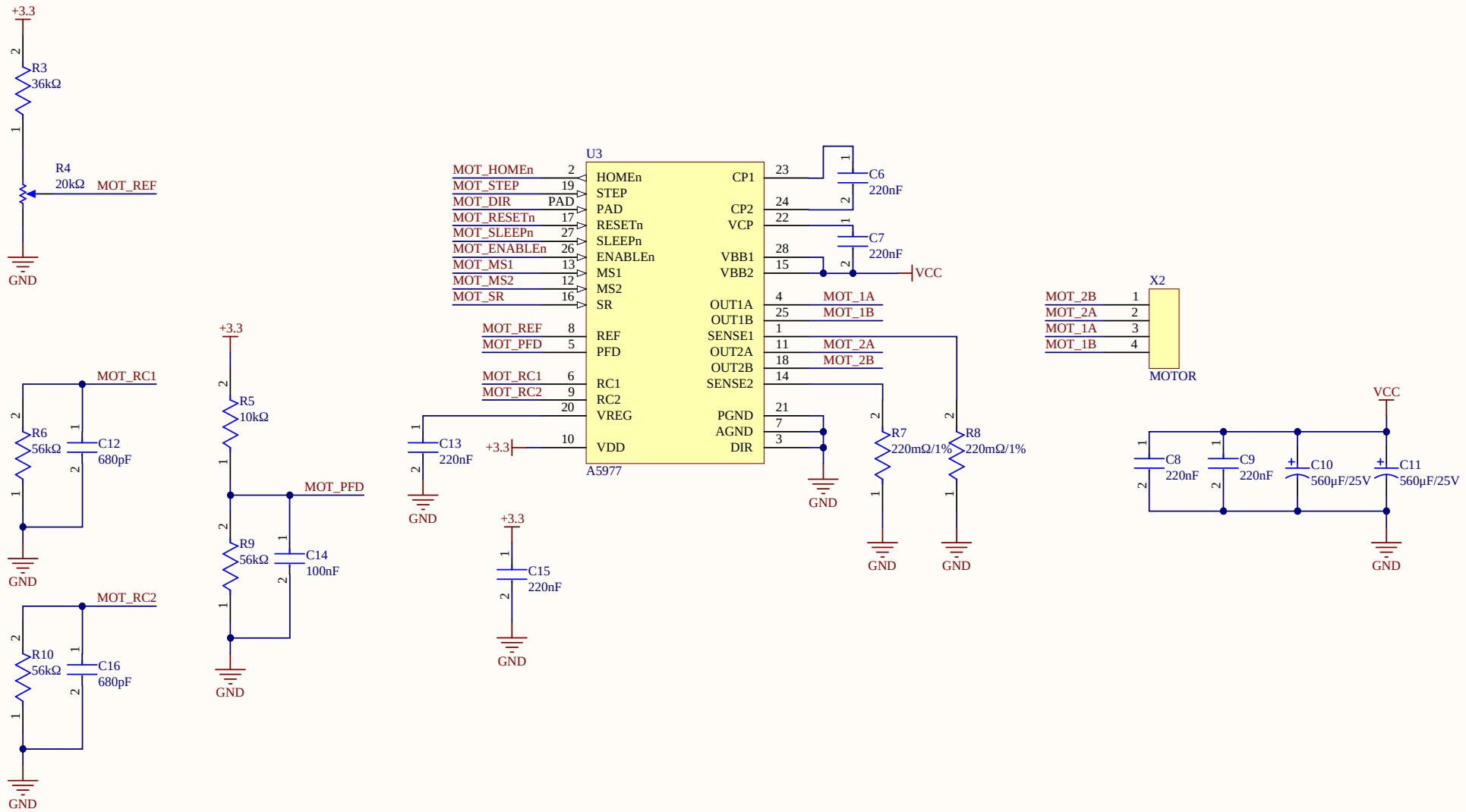

Project:	**Rotary head**
Author:	Jan Olencki
Revision: v1.0	Sheet 2 of 3

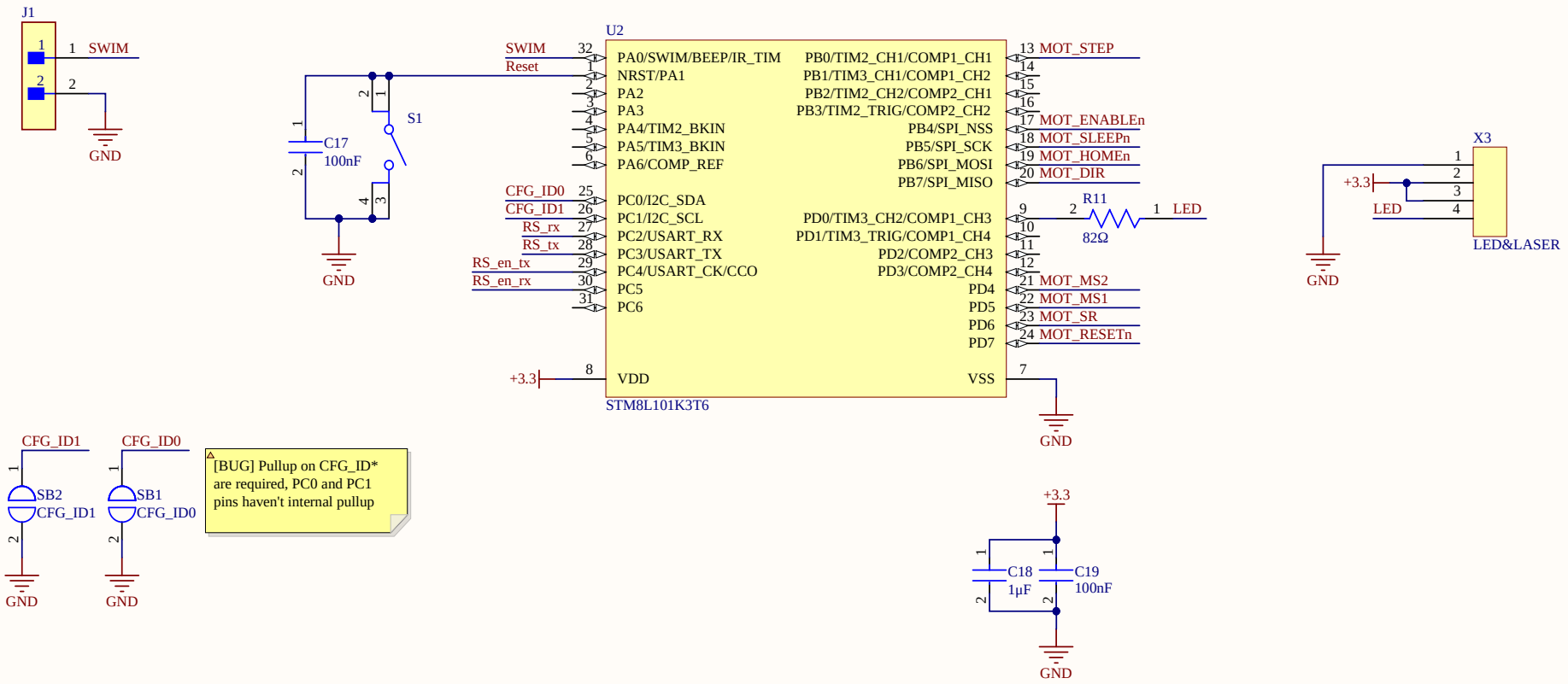

Project: **Rotary head**	
Author: Jan Olencki	
Revision: v1.0	Sheet 3 of 3