REVISION HISTORY			
REV	DESCRIPTION	DATE	AUTHOR
-	INITIAL	12/12/2008	DUTTAA
A	DIMENSION CHANGE	12/12/2008	duttaa

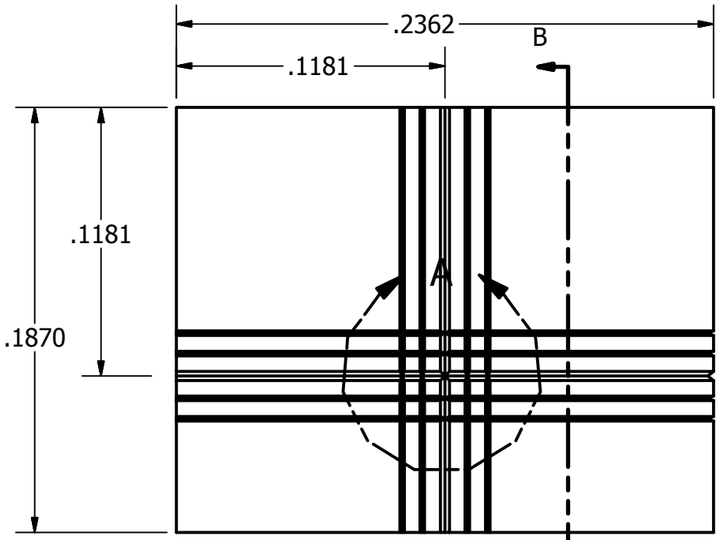

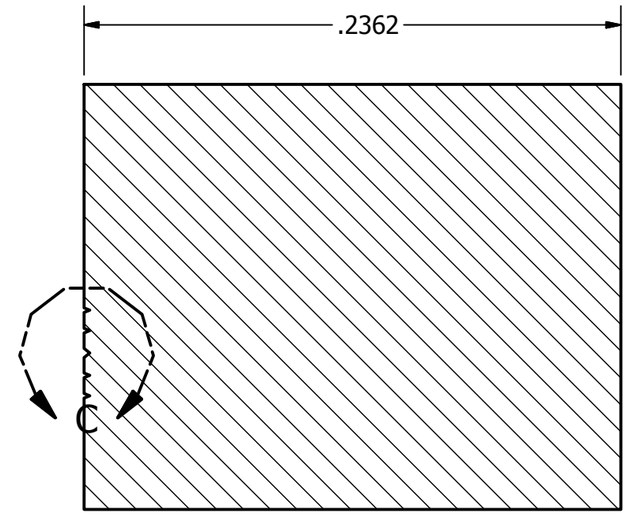

SECTION B-B
SCALE 15 : 1

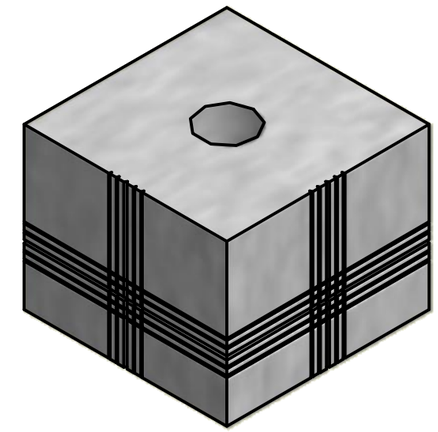

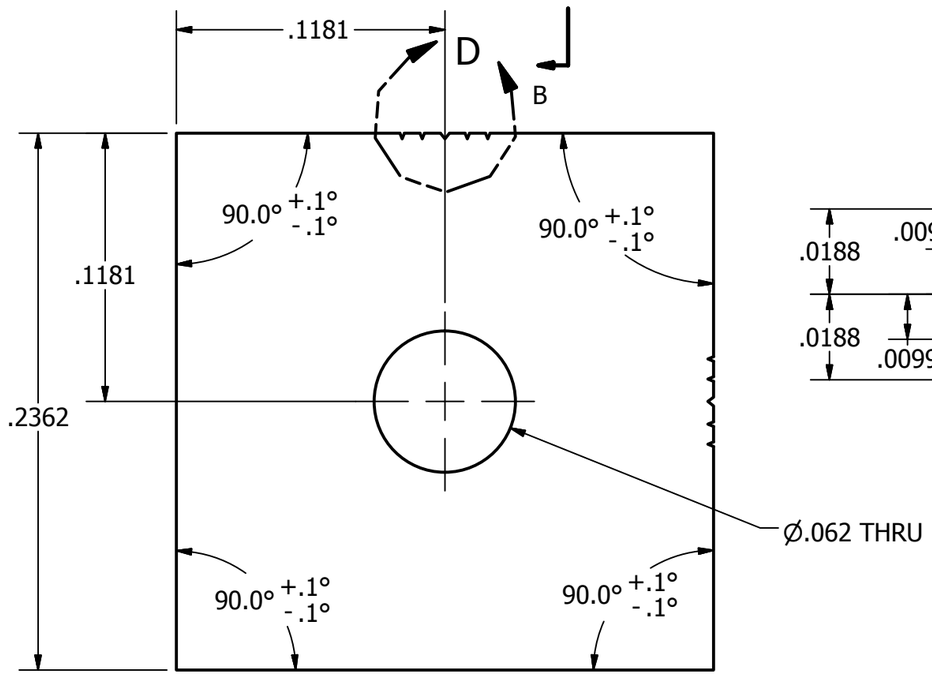

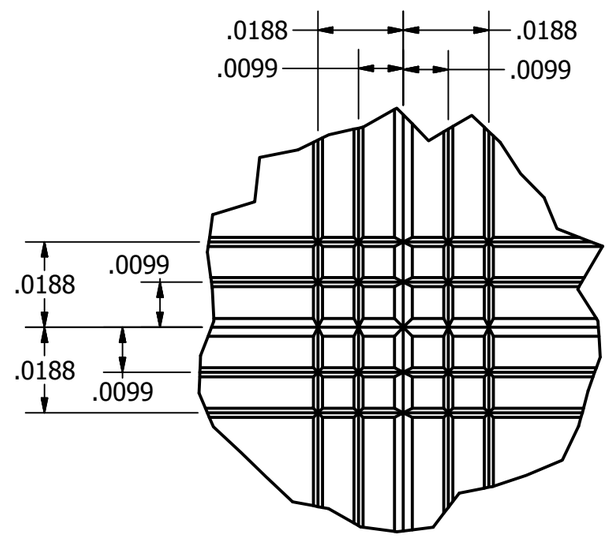

DETAIL A
SCALE 30 : 1

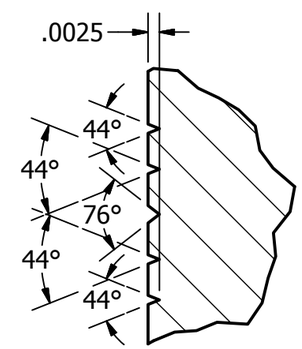

DETAIL C
SCALE 30 : 1

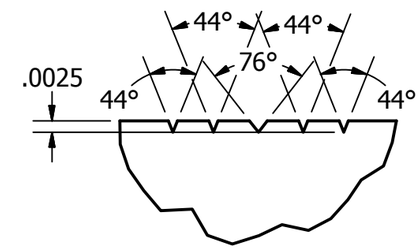

DETAIL D
SCALE 30 : 1

NOTES: UNLESS OTHERWISE SPECIFIED
1. INTERPRET DIMENSION AND TOLERANCES PER ASME Y14.5M-1994.
2. DEBURR AND BREAK ALL SHARP EDGES, MAX 0.010 UNLESS OTHERWISE INDICATED.
3. PARTS ARE TO BE CLEAN AND FREE OF OIL, GREASE, AND OTHER CONTAMINANTS.

TOLERANCES IN INCHES UNLESS OTHERWISE NOTED	
.X	± .03
X.XX	± .010
X.XXX	± 0.005
X.XXXX	± 0.0005
ANGULAR+/- 0.5 DEG	

DRAWN duttaa	12/12/2008
MATERIAL Stainless Steel, 440C	
FINISH None	
SURFACE TEXTURE 32	
DIMENSIONS INCLUDE CHEMICALLY APPLIED FINISHES	
THIS DRAWING IS NOT TO BE USED OR REPRODUCED WITHOUT PERMISSION FROM THE HOWARD HUGHES MEDICAL INSTITUTE	
THIRD ANGLE PROJECTION:	

HHMI
HOWARD HUGHES MEDICAL INSTITUTE
janelia farm research campus

DESCRIPTION
Calibration cube to align the cameras on the treadmill

SIZE	PART NO	REV
B	CalibrationCube_6mm	

MODEL FILE: CalibrationCube_6mm.ipt

SHEET 1 OF 1