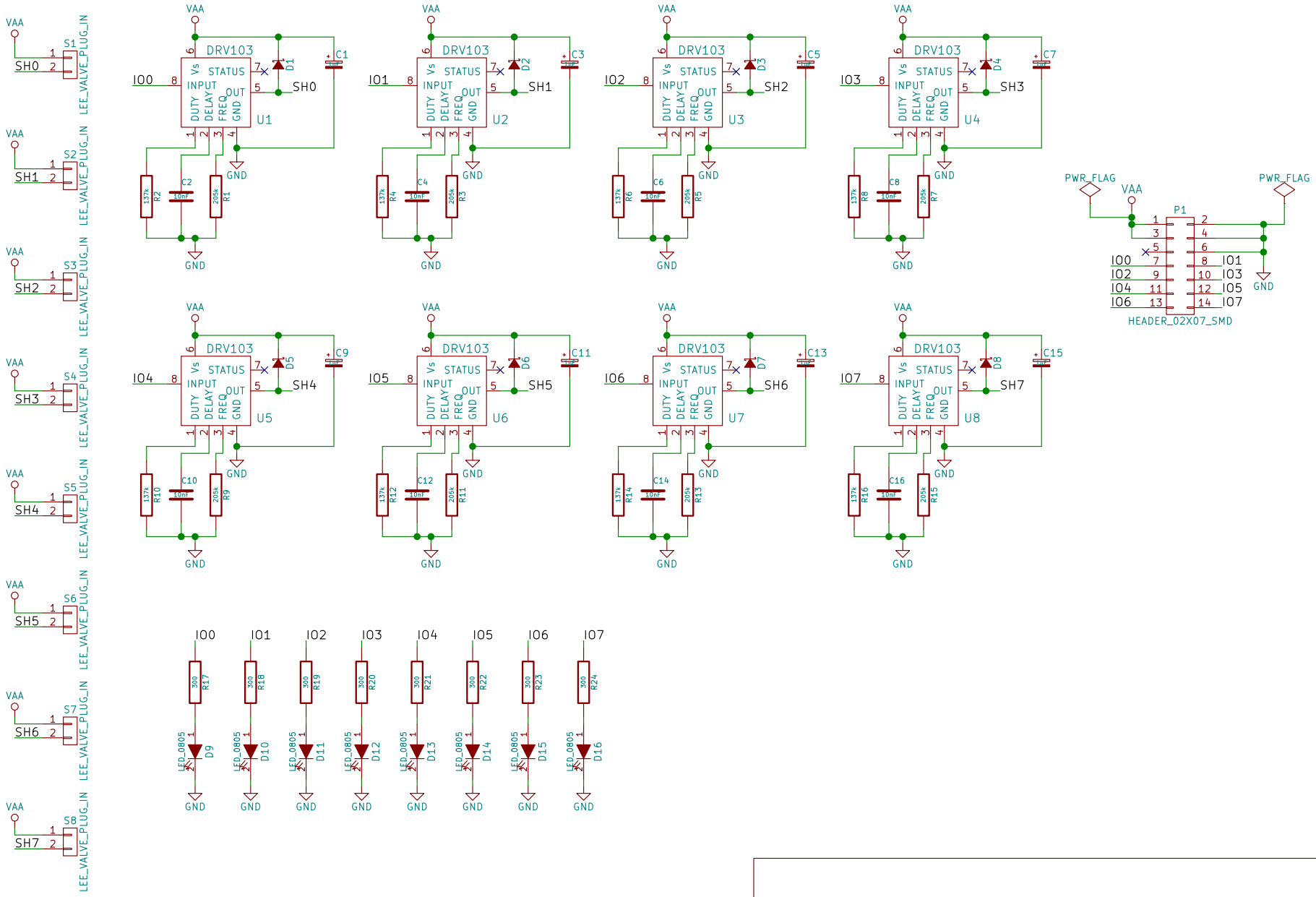

Janelia

Sheet: /

File: hybridizer_manifold_interface.sch

Title: hybridizer_manifold_interface

Size: A	Date:	**Rev: 1.2**
KiCad E.D.A. kicad 0.201506082246+572423ubuntu14.04.1-product		Id: 1/1