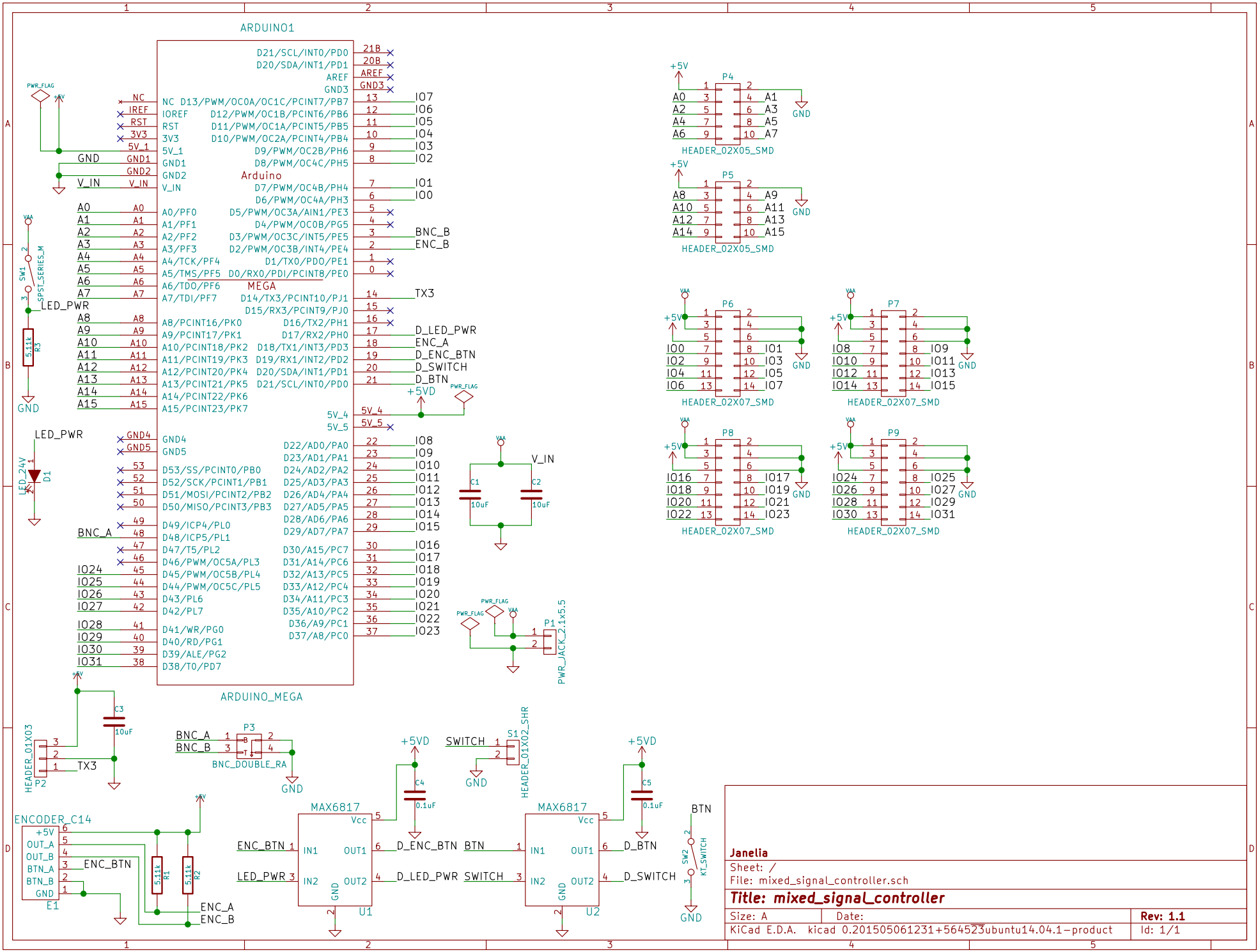
ARDUINO1
ARDUINO_MEGA
Arduino
MEGA
D21/SCL/INT0/PD0
D20/SDA/INT1/PD1
AREF
GND3
NC D13/PWM/OC0A/OC1C/PCINT7/PB7
IOREF D12/PWM/OC1B/PCINT6/PB6
RST D11/PWM/OC1A/PCINT5/PB5
3V3 D10/PWM/OC2A/PCINT4/PB4
5V_1 D9/PWM/OC2B/PH6
GND1 D8/PWM/OC4C/PH5
GND2
V_IN D7/PWM/OC4B/PH4
D6/PWM/OC4A/PH3
A0/PF0 D5/PWM/OC3A/AIN1/PE3
A1/PF1 D4/PWM/OC0B/PG5
A2/PF2 D3/PWM/OC3C/INT5/PE5
A3/PF3 D2/PWM/OC3B/INT4/PE4
A4/TCK/PF4 D1/TX0/PDO/PE1
A5/TMS/PF5 D0/RX0/PDI/PCINT8/PE0
A6/TDO/PF6
A7/TDI/PF7 D14/TX3/PCINT10/PJ1
D15/RX3/PCINT9/PJ0
A8/PCINT16/PK0 D16/TX2/PH1
A9/PCINT17/PK1 D17/RX2/PH0
A10/PCINT18/PK2 D18/TX1/INT3/PD3
A11/PCINT19/PK3 D19/RX1/INT2/PD2
A12/PCINT20/PK4 D20/SDA/INT1/PD1
A13/PCINT21/PK5 D21/SCL/INT0/PD0
A14/PCINT22/PK6
A15/PCINT23/PK7
GND4
GND5
D53/SS/PCINT0/PB0
D52/SCK/PCINT1/PB1
D51/MOSI/PCINT2/PB2
D50/MISO/PCINT3/PB3
D49/ICP4/PL0
D48/ICP5/PL1
D47/T5/PL2
D46/PWM/OC5A/PL3
D45/PWM/OC5B/PL4
D44/PWM/OC5C/PL5
D43/PL6
D42/PL7
D41/WR/PG0
D40/RD/PG1
D39/ALE/PG2
D38/T0/PD7
D22/AD0/PA0
D23/AD1/PA1
D24/AD2/PA2
D25/AD3/PA3
D26/AD4/PA4
D27/AD5/PA5
D28/AD6/PA6
D29/AD7/PA7
D30/A15/PC7
D31/A14/PC6
D32/A13/PC5
D33/A12/PC4
D34/A11/PC3
D35/A10/PC2
D36/A9/PC1
D37/A8/PC0
5V_4
5V_5
PWR_FLAG
GND
V_IN
LED_PWR
SW1
SPST_SERIES_M
R3
5.11k
LED_24V
D1
BNC_A
BNC_B
ENC_B
TX3
D_LED_PWR
ENC_A
D_ENC_BTN
D_SWITCH
D_BTN
+5VD
C1
C2
10uF
P1
PWR_JACK_2.1x5.5
P2
HEADER_01X03
C3
P3
BNC_DOUBLE_RA
ENCODER_C14
E1
ENC_BTN
R1
R2
MAX6817
U1
U2
C4
C5
0.1uF
SWITCH
S1
HEADER_01X02_SHR
BTN
SW2
KT_SWITCH
P4
P5
P6
P7
P8
P9
HEADER_02X05_SMD
HEADER_02X07_SMD
Janelia
Sheet: /
File: mixed_signal_controller.sch
Title: mixed_signal_controller
Size: A
Date:
Rev: 1.1
KiCad E.D.A. kicad 0.201505061231+564523ubuntu14.04.1-product
Id: 1/1