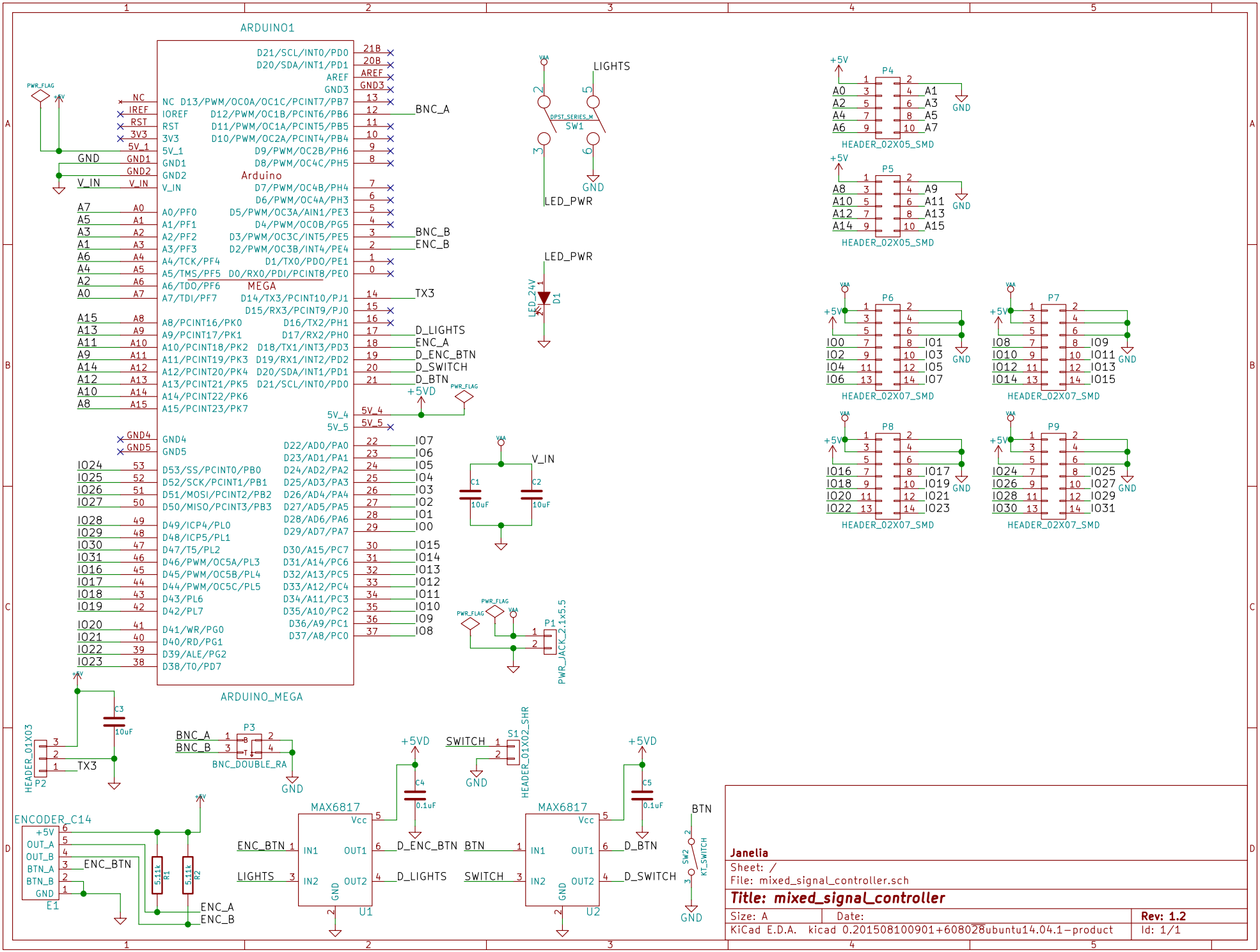
ARDUINO1
Arduino
MEGA
ARDUINO_MEGA
LIGHTS
SW1
DPST_SERIES_M
LED_PWR
LED_24V
D1
P4
P5
P6
P7
P8
P9
HEADER_02X05_SMD
HEADER_02X07_SMD
P1
PWR_JACK_2.1x5.5
P2
HEADER_01X03
P3
BNC_DOUBLE_RA
S1
HEADER_01X02_SHR
ENCODER_C14
E1
MAX6817
U1
U2
SW2
KT_SWITCH
BTN
BNC_A
BNC_B
ENC_B
TX3
D_LIGHTS
ENC_A
D_ENC_BTN
D_SWITCH
D_BTN
V_IN
GND
+5VD
+5V
C1
C2
C3
C4
C5
10uF
0.1uF
R1
R2
5.11k
ENC_BTN
SWITCH
Janelia
Sheet: /
File: mixed_signal_controller.sch
Title: mixed_signal_controller
Size: A
Date:
Rev: 1.2
KiCad E.D.A. kicad 0.201508100901+608028ubuntu14.04.1-product
Id: 1/1