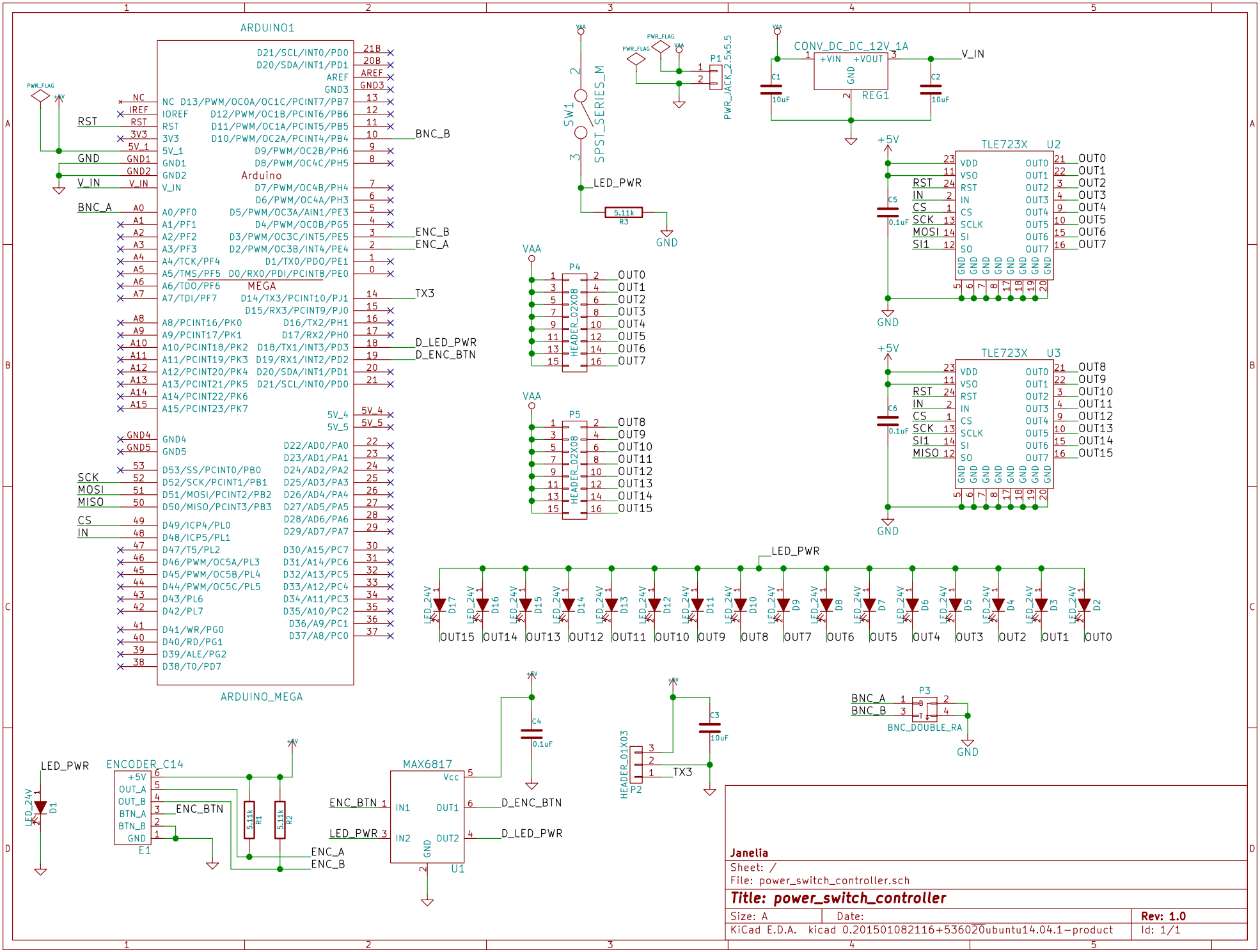
ARDUINO1
ARDUINO_MEGA
Arduino
MEGA
NC D13/PWM/OC0A/OC1C/PCINT7/PB7
IOREF D12/PWM/OC1B/PCINT6/PB6
RST D11/PWM/OC1A/PCINT5/PB5
3V3 D10/PWM/OC2A/PCINT4/PB4
5V_1 D9/PWM/OC2B/PH6
GND1 D8/PWM/OC4C/PH5
GND2
V_IN D7/PWM/OC4B/PH4
D6/PWM/OC4A/PH3
A0/PF0 D5/PWM/OC3A/AIN1/PE3
A1/PF1 D4/PWM/OC0B/PG5
A2/PF2 D3/PWM/OC3C/INT5/PE5
A3/PF3 D2/PWM/OC3B/INT4/PE4
A4/TCK/PF4 D1/TX0/PDO/PE1
A5/TMS/PF5 D0/RX0/PDI/PCINT8/PE0
A6/TDO/PF6
A7/TDI/PF7 D14/TX3/PCINT10/PJ1
D15/RX3/PCINT9/PJ0
A8/PCINT16/PK0 D16/TX2/PH1
A9/PCINT17/PK1 D17/RX2/PH0
A10/PCINT18/PK2 D18/TX1/INT3/PD3
A11/PCINT19/PK3 D19/RX1/INT2/PD2
A12/PCINT20/PK4 D20/SDA/INT1/PD1
A13/PCINT21/PK5 D21/SCL/INT0/PD0
A14/PCINT22/PK6
A15/PCINT23/PK7
GND4
GND5
D53/SS/PCINT0/PB0
D52/SCK/PCINT1/PB1
D51/MOSI/PCINT2/PB2
D50/MISO/PCINT3/PB3
D49/ICP4/PL0
D48/ICP5/PL1
D47/T5/PL2
D46/PWM/OC5A/PL3
D45/PWM/OC5B/PL4
D44/PWM/OC5C/PL5
D43/PL6
D42/PL7
D41/WR/PG0
D40/RD/PG1
D39/ALE/PG2
D38/T0/PD7
D21/SCL/INT0/PD0
D20/SDA/INT1/PD1
AREF
GND3
D22/AD0/PA0
D23/AD1/PA1
D24/AD2/PA2
D25/AD3/PA3
D26/AD4/PA4
D27/AD5/PA5
D28/AD6/PA6
D29/AD7/PA7
D30/A15/PC7
D31/A14/PC6
D32/A13/PC5
D33/A12/PC4
D34/A11/PC3
D35/A10/PC2
D36/A9/PC1
D37/A8/PC0
21B
20B
5V_4
5V_5
BNC_B
ENC_B
ENC_A
TX3
D_LED_PWR
D_ENC_BTN
RST
GND
V_IN
BNC_A
SCK
MOSI
MISO
CS
IN
PWR_FLAG
SW1
SPST_SERIES_M
LED_PWR
R3 5.11k
GND
P1
PWR_JACK_2.5x5.5
CONV_DC_DC_12V_1A
+VIN
+VOUT
REG1
C1 10uF
C2 10uF
TLE723X U2
TLE723X U3
VDD
VSO
RST
IN
CS
SCK
SCLK
SI
SO
SI1
MISO
OUT0
OUT1
OUT2
OUT3
OUT4
OUT5
OUT6
OUT7
OUT8
OUT9
OUT10
OUT11
OUT12
OUT13
OUT14
OUT15
C5 0.1uF
C6 0.1uF
+5V
VAA
P4
P5
HEADER_02X08
LED_24V
D1
D2
D3
D4
D5
D6
D7
D8
D9
D10
D11
D12
D13
D14
D15
D16
D17
ENCODER_C14
+5V
OUT_A
OUT_B
BTN_A
BTN_B
GND
E1
ENC_BTN
R1 5.11k
R2 5.11k
ENC_A
ENC_B
MAX6817
Vcc
IN1
IN2
OUT1
OUT2
U1
C4 0.1uF
D_ENC_BTN
D_LED_PWR
HEADER_01X03
P2
C3 10uF
TX3
P3
BNC_DOUBLE_RA
Janelia
Sheet: /
File: power_switch_controller.sch
Title: power_switch_controller
Size: A
Date:
Rev: 1.0
KiCad E.D.A. kicad 0.201501082116+536020ubuntu14.04.1-product
Id: 1/1