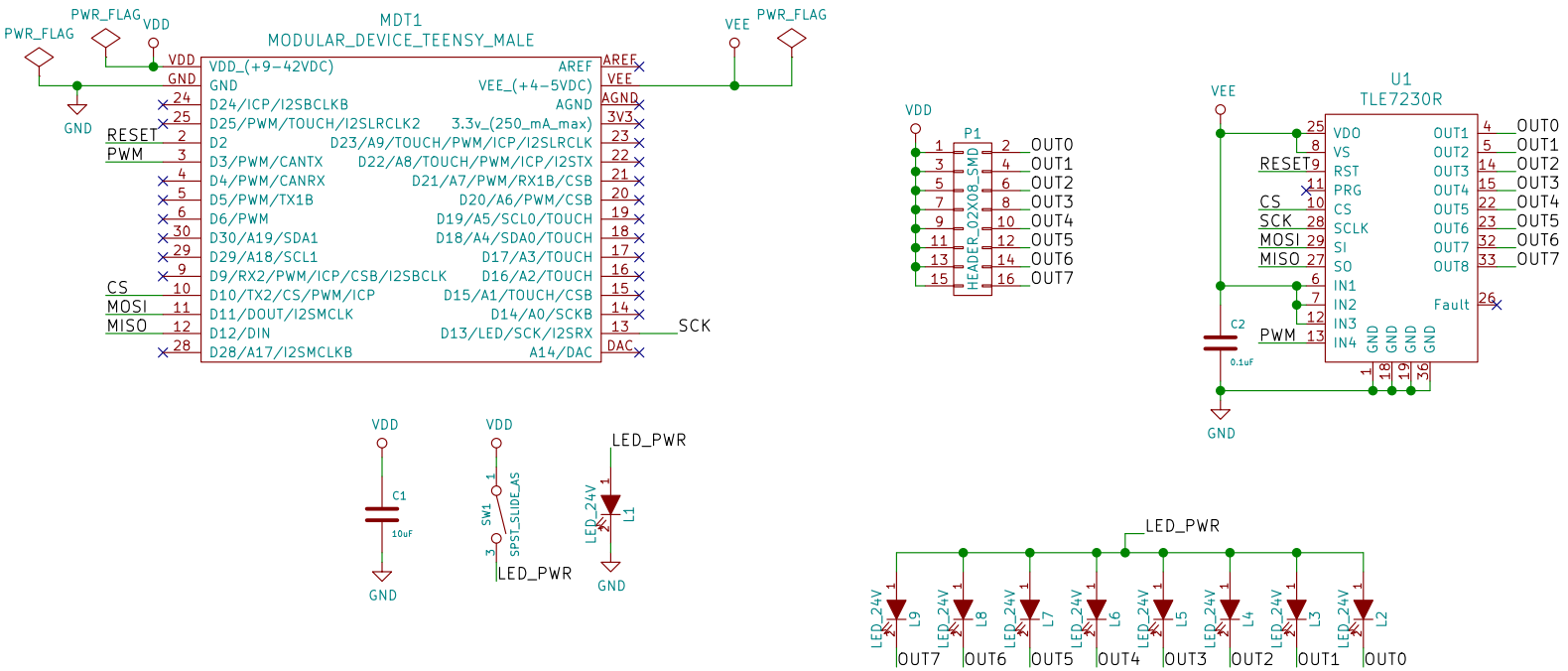

Janelia

Sheet: /

File: power_switch_controller_teensy.sch

Title: power_switch_controller_teensy

Size: A	Date:	Rev: 1.0
KiCad E.D.A. kicad 4.1.0-alpha+201607200716+6988~46~ubuntu16.04.1-product		Id: 1/1