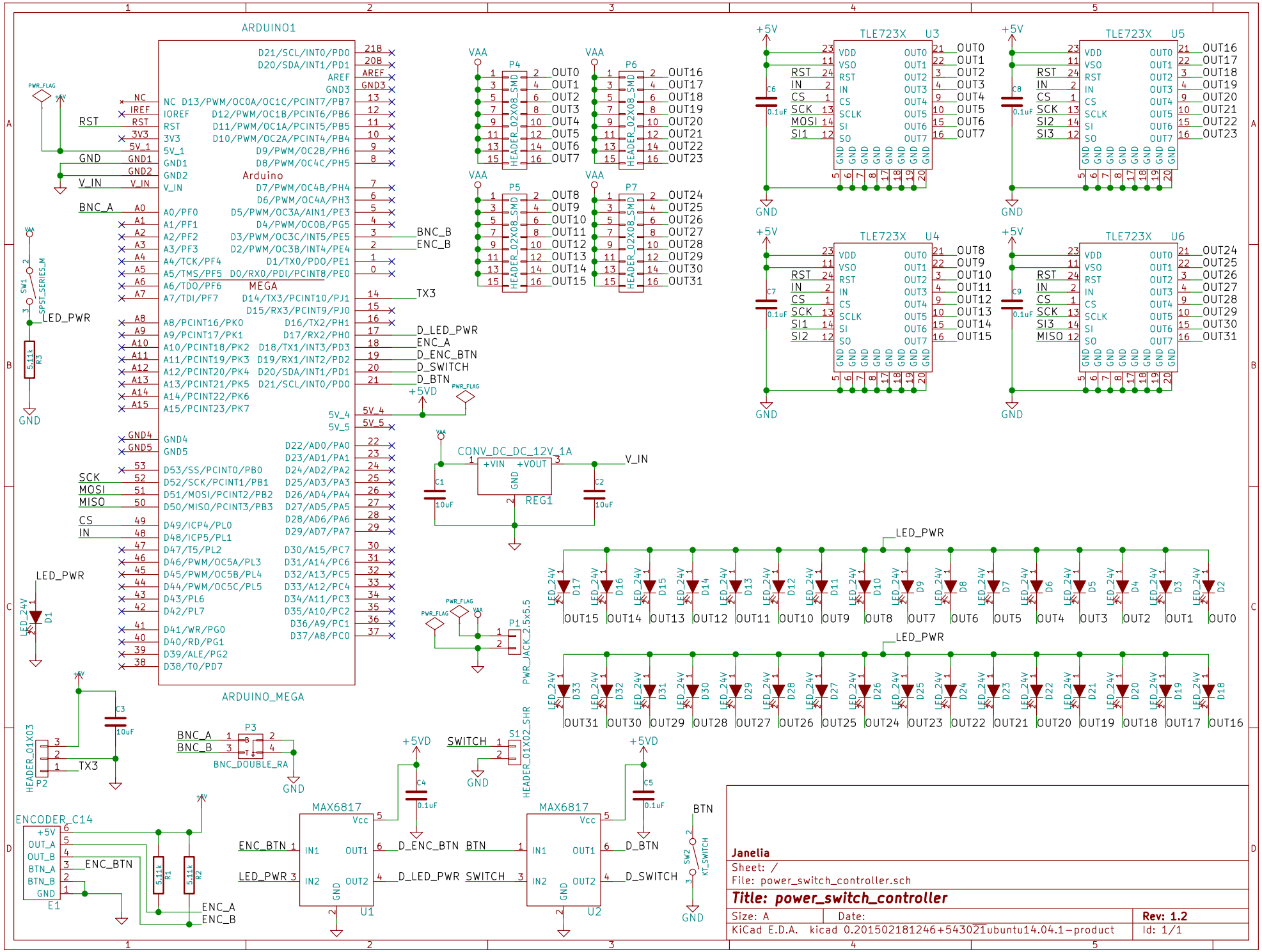
ARDUINO1
ARDUINO_MEGA
Arduino
MEGA
TLE723X U3
TLE723X U4
TLE723X U5
TLE723X U6
P4
P5
P6
P7
HEADER_02X08_SMD
CONV_DC_DC_12V_1A
REG1
P1
PWR_JACK_2.5x5.5
P3
BNC_DOUBLE_RA
P2
HEADER_01X03
S1
HEADER_01X02_SHR
ENCODER_C14
E1
MAX6817
U1
U2
SW1
SPST_SERIES_M
SW2
KT_SWITCH
LED_PWR
LED_24V
+5V
+5VD
GND
VAA
RST
GND
V_IN
BNC_A
BNC_B
ENC_B
TX3
D_LED_PWR
ENC_A
D_ENC_BTN
D_SWITCH
D_BTN
SCK
MOSI
MISO
CS
IN
SWITCH
BTN
ENC_BTN
Janelia
Sheet: /
File: power_switch_controller.sch
Title: power_switch_controller
Size: A
Date:
Rev: 1.2
KiCad E.D.A. kicad 0.201502181246+5430~21ubuntu14.04.1-product
Id: 1/1