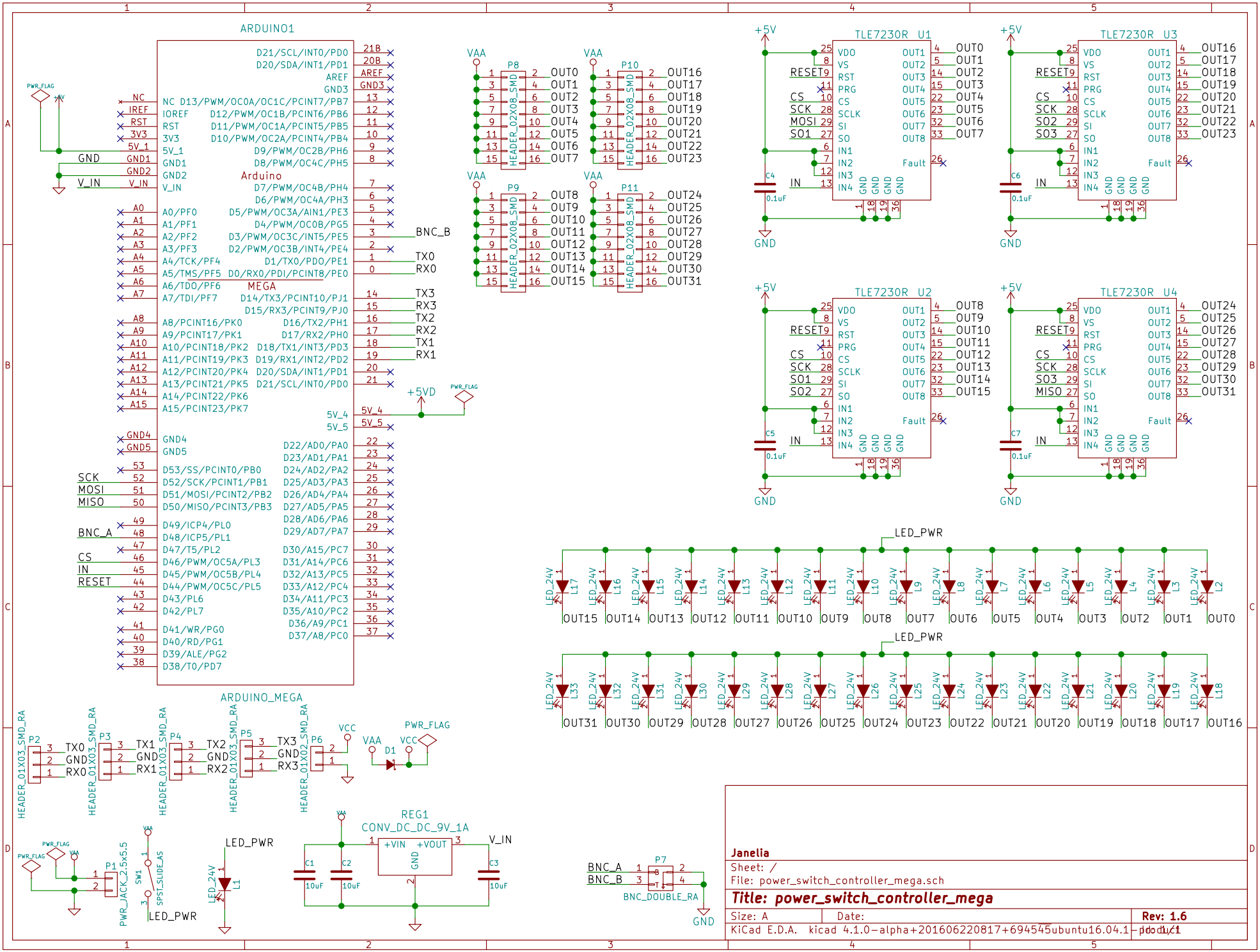
ARDUINO1
Arduino
MEGA
ARDUINO_MEGA
TLE7230R U1
TLE7230R U2
TLE7230R U3
TLE7230R U4
LED_PWR
REG1
CONV_DC_DC_9V_1A
BNC_DOUBLE_RA
PWR_JACK_2.5x5.5
SPST_SLIDE_AS
HEADER_01X03_SMD_RA
HEADER_01X02_SMD_RA
HEADER_02X08_SMD
Janelia
Sheet: /
File: power_switch_controller_mega.sch
Title: power_switch_controller_mega
Size: A
Date:
Rev: 1.6
KiCad E.D.A. kicad 4.1.0-alpha+201606220817+694545ubuntu16.04.1-product
Id: 1/1