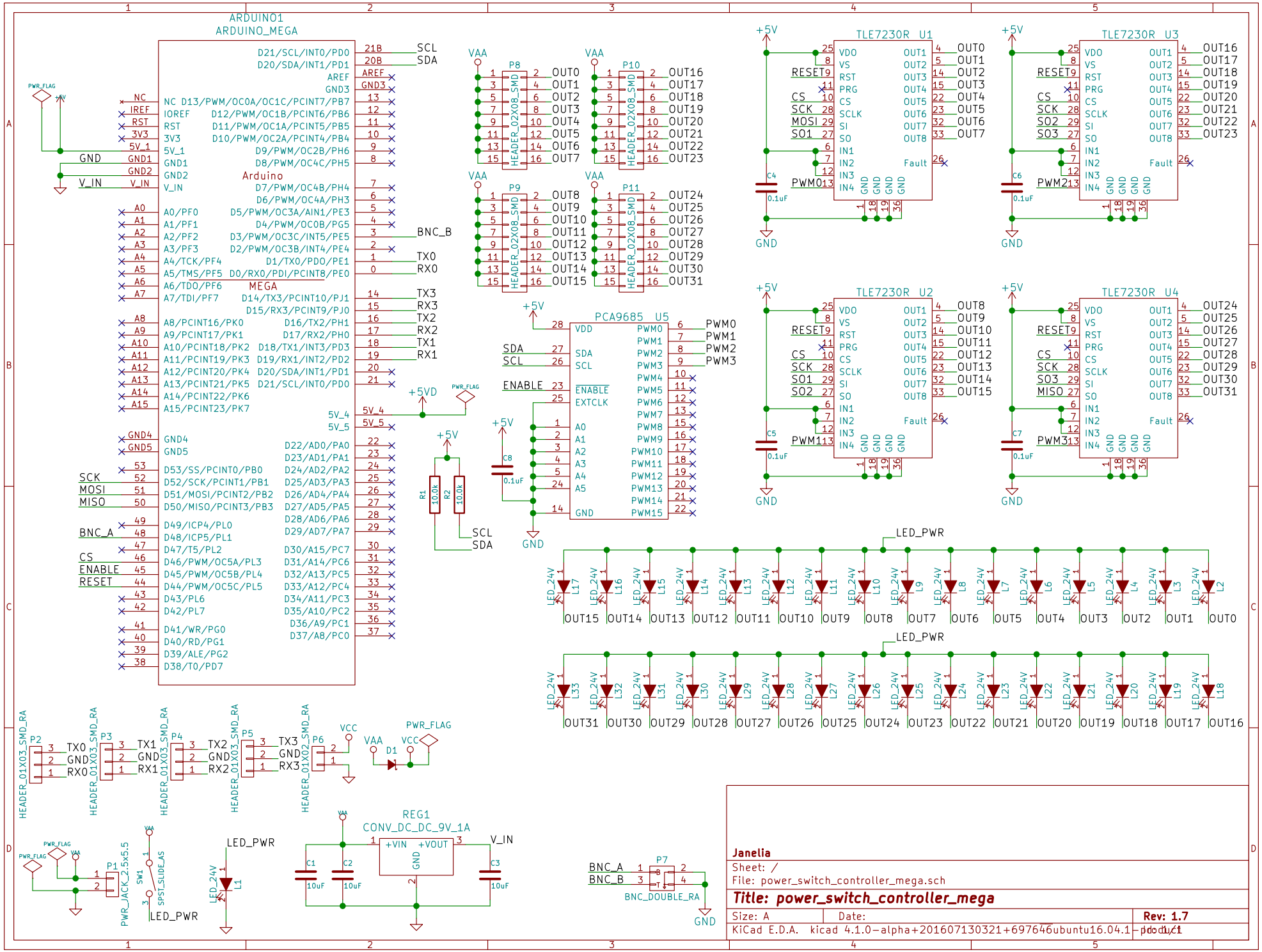
ARDUINO1
ARDUINO_MEGA
Arduino
MEGA
TLE7230R U1
TLE7230R U2
TLE7230R U3
TLE7230R U4
PCA9685 U5
P8
P9
P10
P11
LED_PWR
REG1
CONV_DC_DC_9V_1A
P1
PWR_JACK_2.5x5.5
SW1
SPST_SLIDE_AS
P2
P3
P4
P5
P6
P7
BNC_DOUBLE_RA
Janelia
Sheet: /
File: power_switch_controller_mega.sch
Title: power_switch_controller_mega
Size: A
Date:
Rev: 1.7
KiCad E.D.A. kicad 4.1.0-alpha+201607130321+6976~46~ubuntu16.04.1-product
Id: 1/1