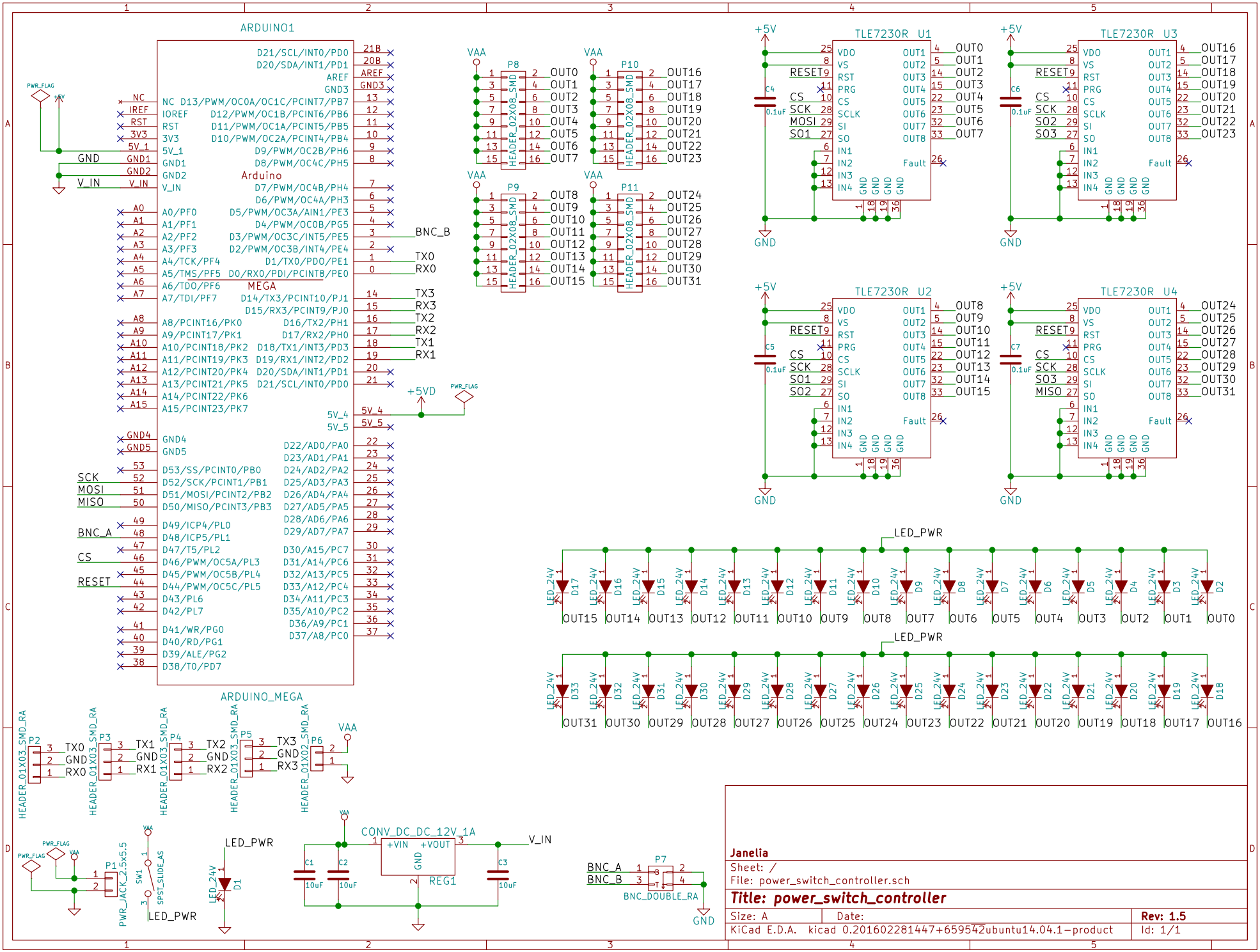
ARDUINO1
Arduino
MEGA
ARDUINO_MEGA
TLE7230R U1
TLE7230R U2
TLE7230R U3
TLE7230R U4
P8
P9
P10
P11
LED_PWR
CONV_DC_DC_12V_1A
REG1
BNC_A
BNC_B
BNC_DOUBLE_RA
PWR_JACK_2.5x5.5
SPST_SLIDE_AS
HEADER_01X03_SMD_RA
HEADER_01X02_SMD_RA
HEADER_02X08_SMD
+5V
+5VD
VAA
GND
V_IN
Janelia
Sheet: /
File: power_switch_controller.sch
Title: power_switch_controller
Size: A
Date:
Rev: 1.5
KiCad E.D.A. kicad 0.201602281447+659542ubuntu14.04.1-product
Id: 1/1