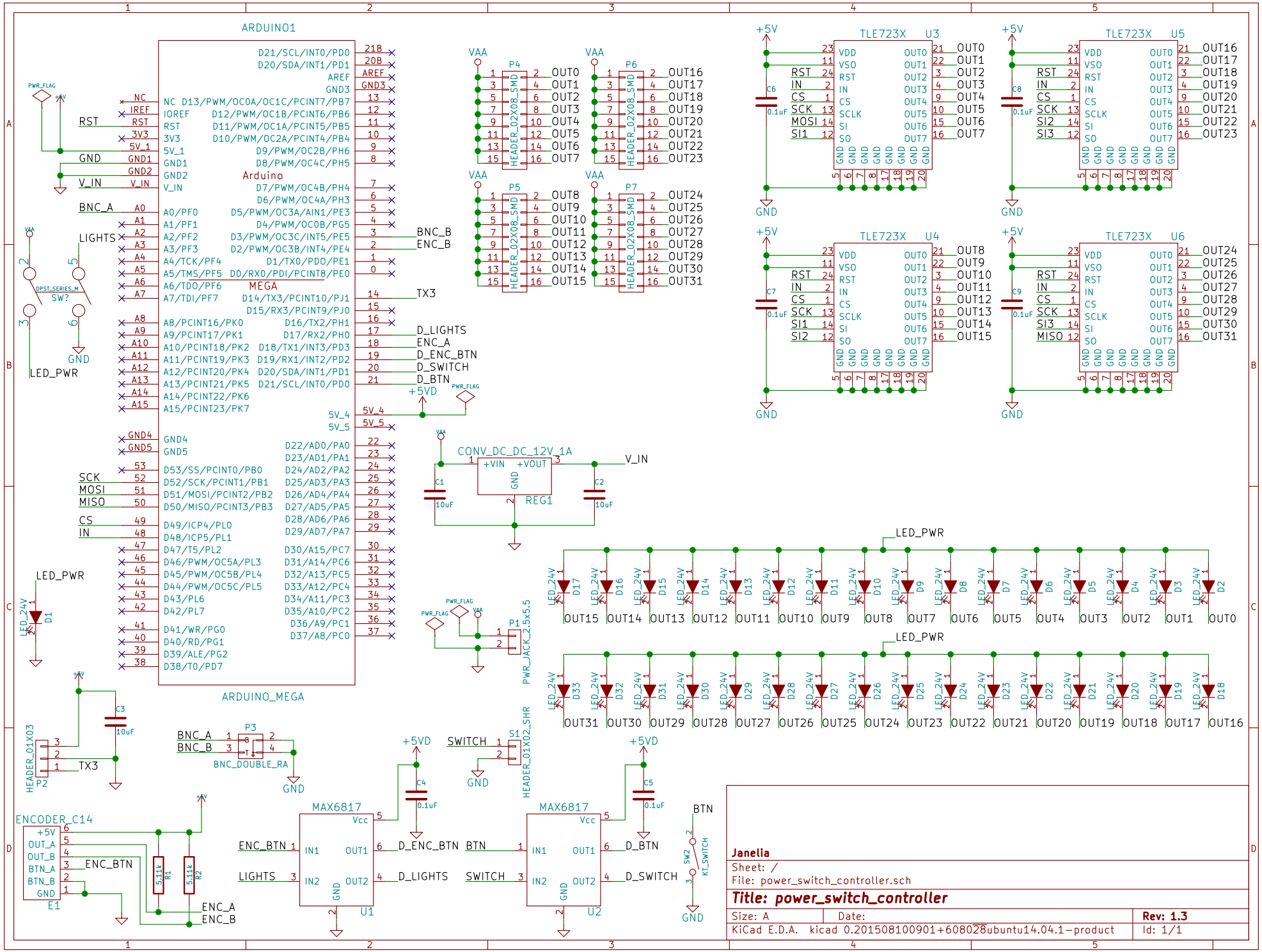
ARDUINO1
ARDUINO_MEGA
Arduino
MEGA
TLE723X U3
TLE723X U4
TLE723X U5
TLE723X U6
P4
P5
P6
P7
HEADER_02X08_SMD
CONV_DC_DC_12V_1A
REG1
+VIN
+VOUT
GND
V_IN
LED_PWR
LED_24V
PWR_JACK_2.5x5.5
HEADER_01X03
P2
P3
BNC_DOUBLE_RA
HEADER_01X02_SHR
S1
SWITCH
ENCODER_C14
E1
MAX6817
U1
U2
+5VD
BTN
SW2
KT_SWITCH
DPST_SERIES_M
SW?
PWR_FLAG
+5V
VAA
RST
GND
V_IN
BNC_A
LIGHTS
BNC_B
ENC_B
TX3
D_LIGHTS
ENC_A
D_ENC_BTN
D_SWITCH
D_BTN
SCK
MOSI
MISO
CS
IN
ENC_BTN
OUT0
OUT1
OUT2
OUT3
OUT4
OUT5
OUT6
OUT7
OUT8
OUT9
OUT10
OUT11
OUT12
OUT13
OUT14
OUT15
OUT16
OUT17
OUT18
OUT19
OUT20
OUT21
OUT22
OUT23
OUT24
OUT25
OUT26
OUT27
OUT28
OUT29
OUT30
OUT31
Janelia
Sheet: /
File: power_switch_controller.sch
Title: power_switch_controller
Size: A
Date:
Rev: 1.3
KiCad E.D.A. kicad 0.201508100901+608028ubuntu14.04.1-product
Id: 1/1