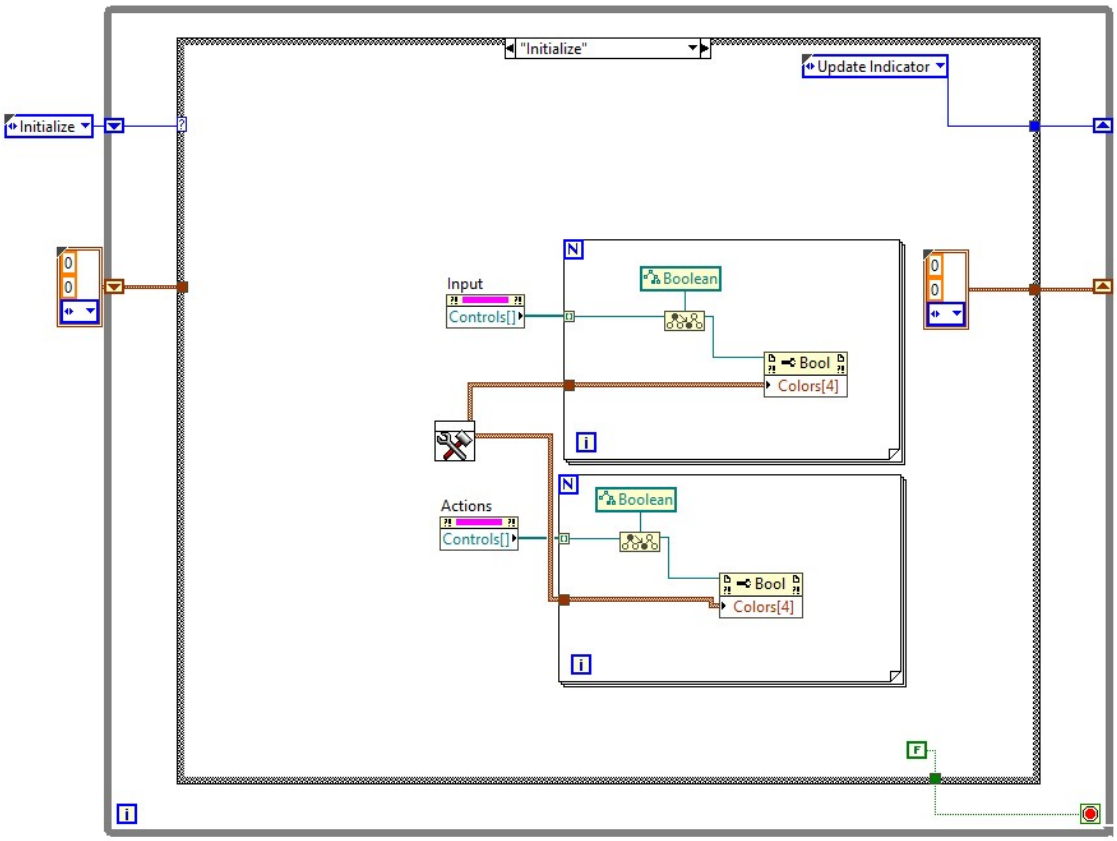
"Initialize"
Update Indicator
Initialize
Input
Controls[]
Boolean
Bool
Colors[4]
Actions
Controls[]
Boolean
Bool
Colors[4]

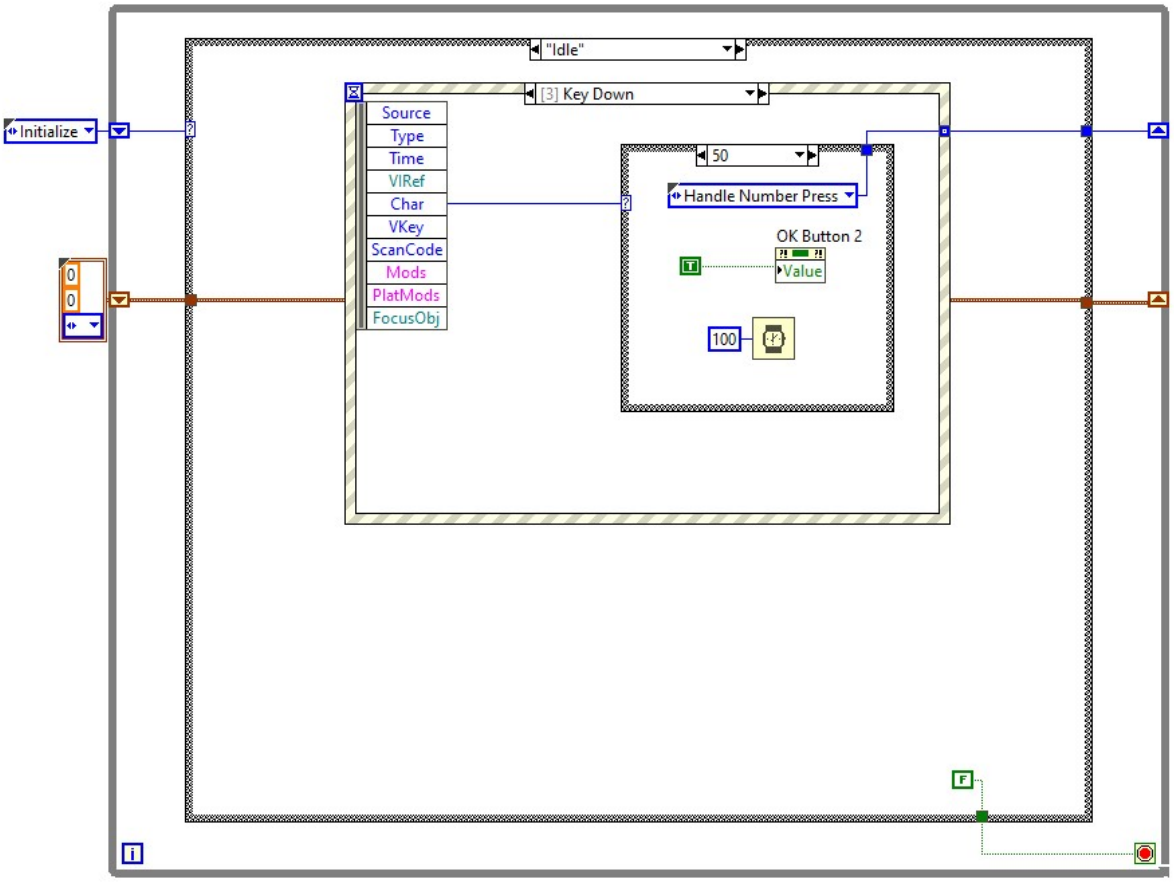
"Idle"
[3] Key Down
Initialize
Source
Type
Time
VIRef
Char
VKey
ScanCode
Mods
PlatMods
FocusObj
50
Handle Number Press
OK Button 2
Value
100

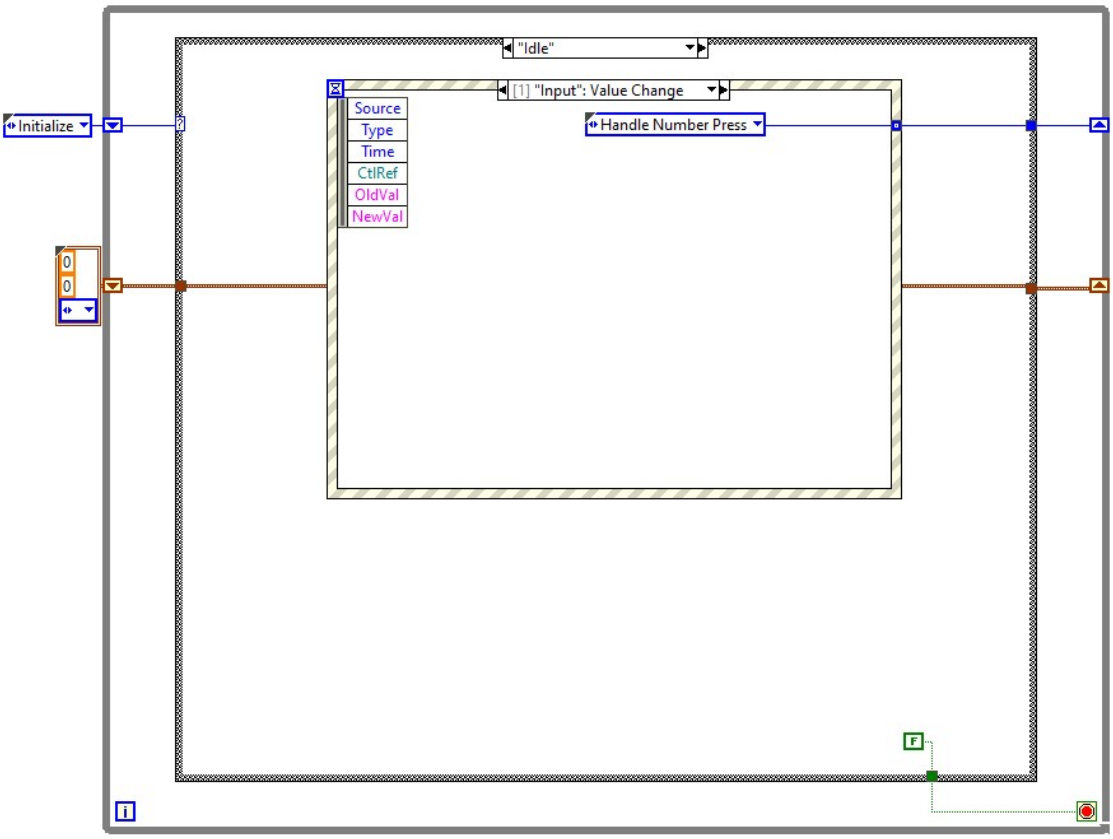
"Idle"
[1] "Input": Value Change
Initialize
Source
Type
Time
CtlRef
OldVal
NewVal
Handle Number Press
0
0

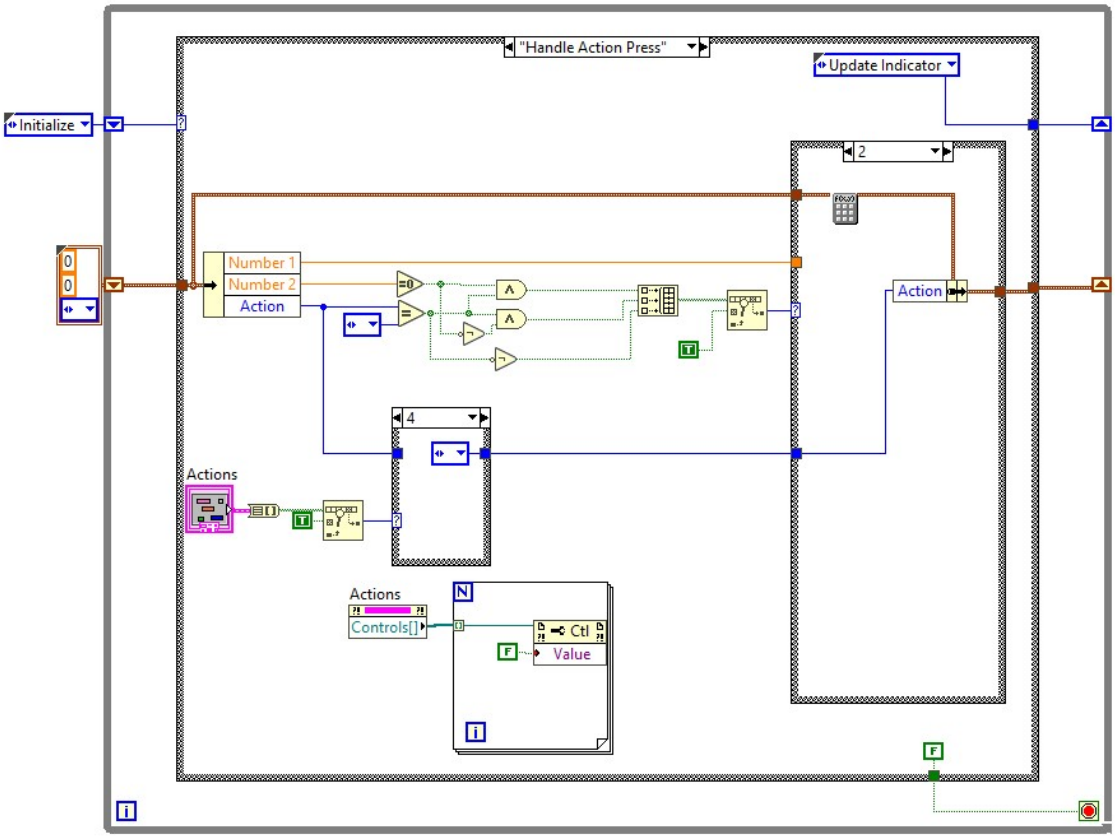
"Handle Action Press"
Update Indicator
Initialize
0
0
Number 1
Number 2
Action
2
Action
4
Actions
Actions
Controls[]
Ctl
Value

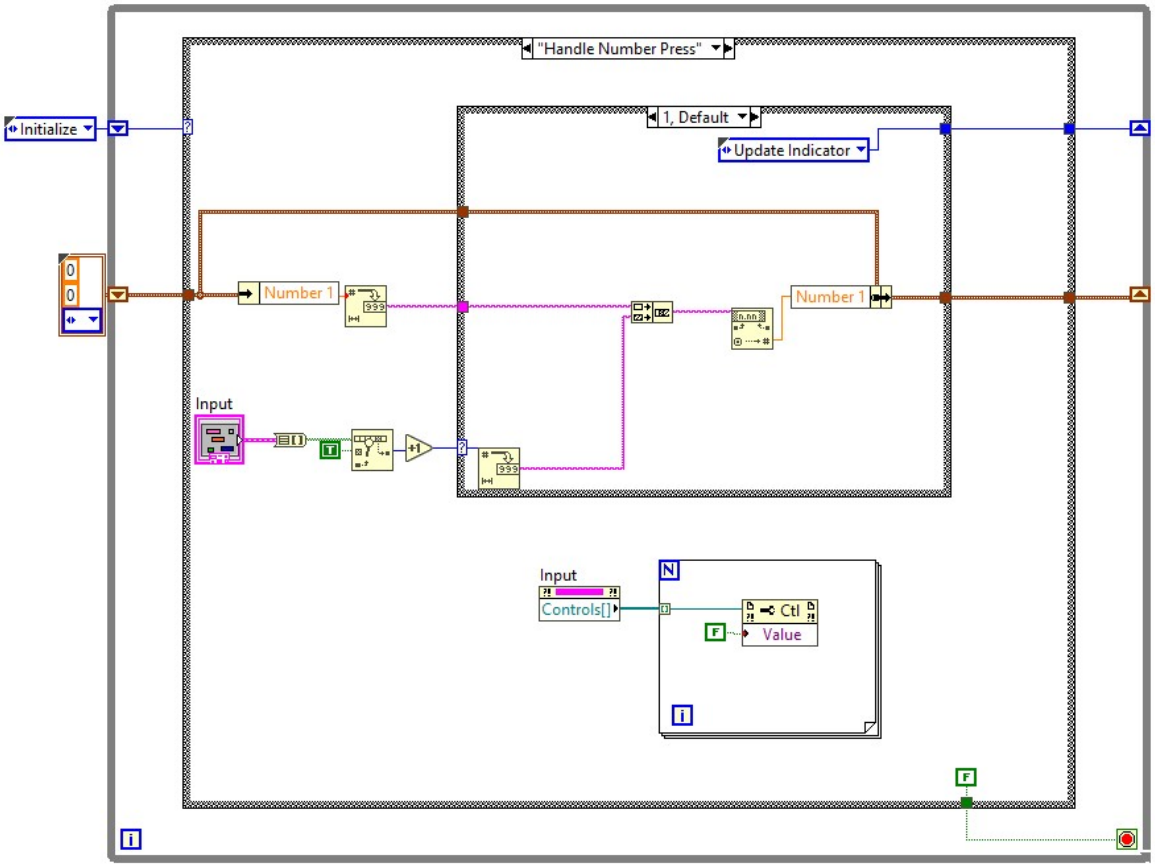
"Handle Number Press"
Initialize
1, Default
Update Indicator
Number 1
Number 1
Input
Input
Controls[]
Ctl
Value

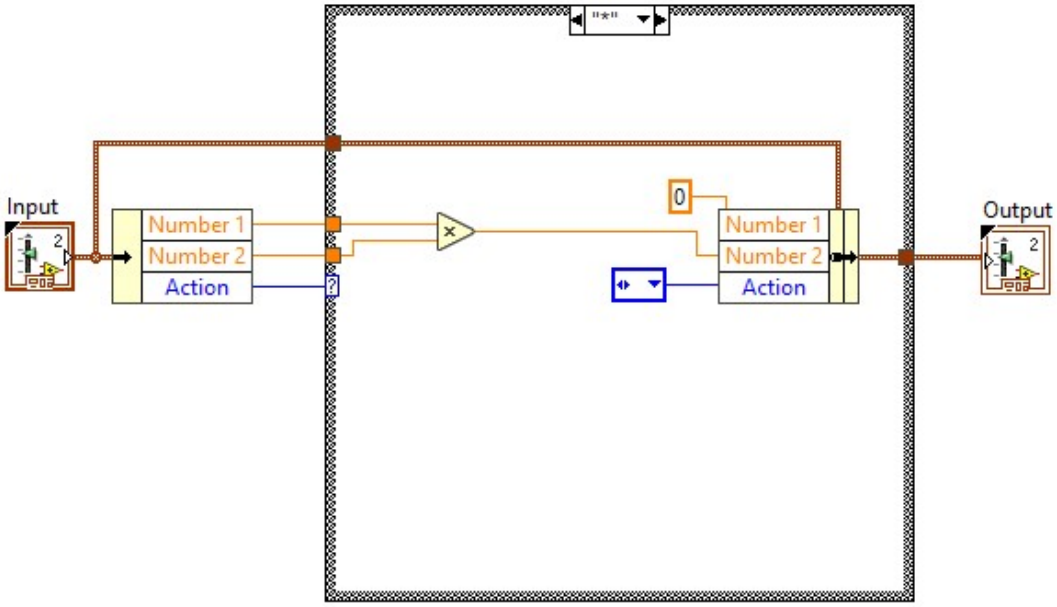
"*"
Input
Number 1
Number 2
Action
0
Number 1
Number 2
Action
Output

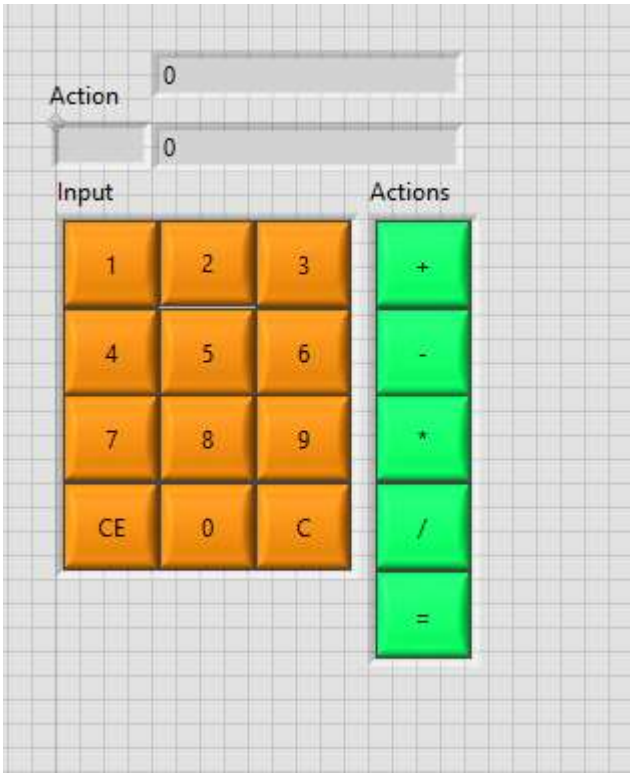
Action
0
0
Input
Actions
1
2
3
4
5
6
7
8
9
CE
0
C
+
-
*
/
=