3-Port ADS Amplifier Simulation
Rev 1

9/11/25

We will cover basic building blocks in ADS linear (small signal) amplifier simulation.

1. **For a 2-Stage amplifer we collect a 3 port sparameter file. This is because there is the need for matching on the output of the first stage of the 2-stage amp, and matching on the output of the second stage.**

2. In ADS we can hook up the S3P block and produce an S2P response, that way we can include the interstage matching contributions to generate a more accurate simulation.

3. Pay attention to trace lengths between matching components and the DUT. These spacing lengths are critical to producing an 'accurate' ADS output.

Overview of the .s3p simulation with labeling. We will discuss key blocks separately.

#1 – Optimization block
#2 – Optimization Goal
#3 – PCB substrate and trace width variable
#4 – .s3p simulation
#5 - .s3p port 1
#6 – matching component model
#7 – 50 ohm trace model
#8 – GRF5604 .s3p file
#9 - .s3p Port 2

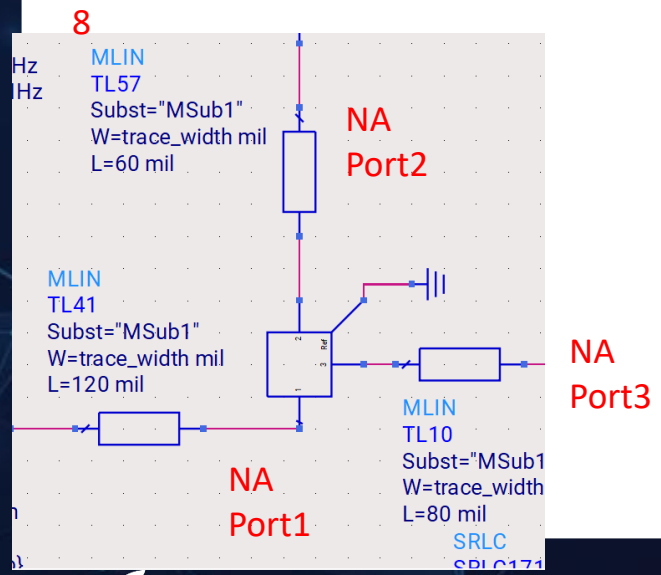

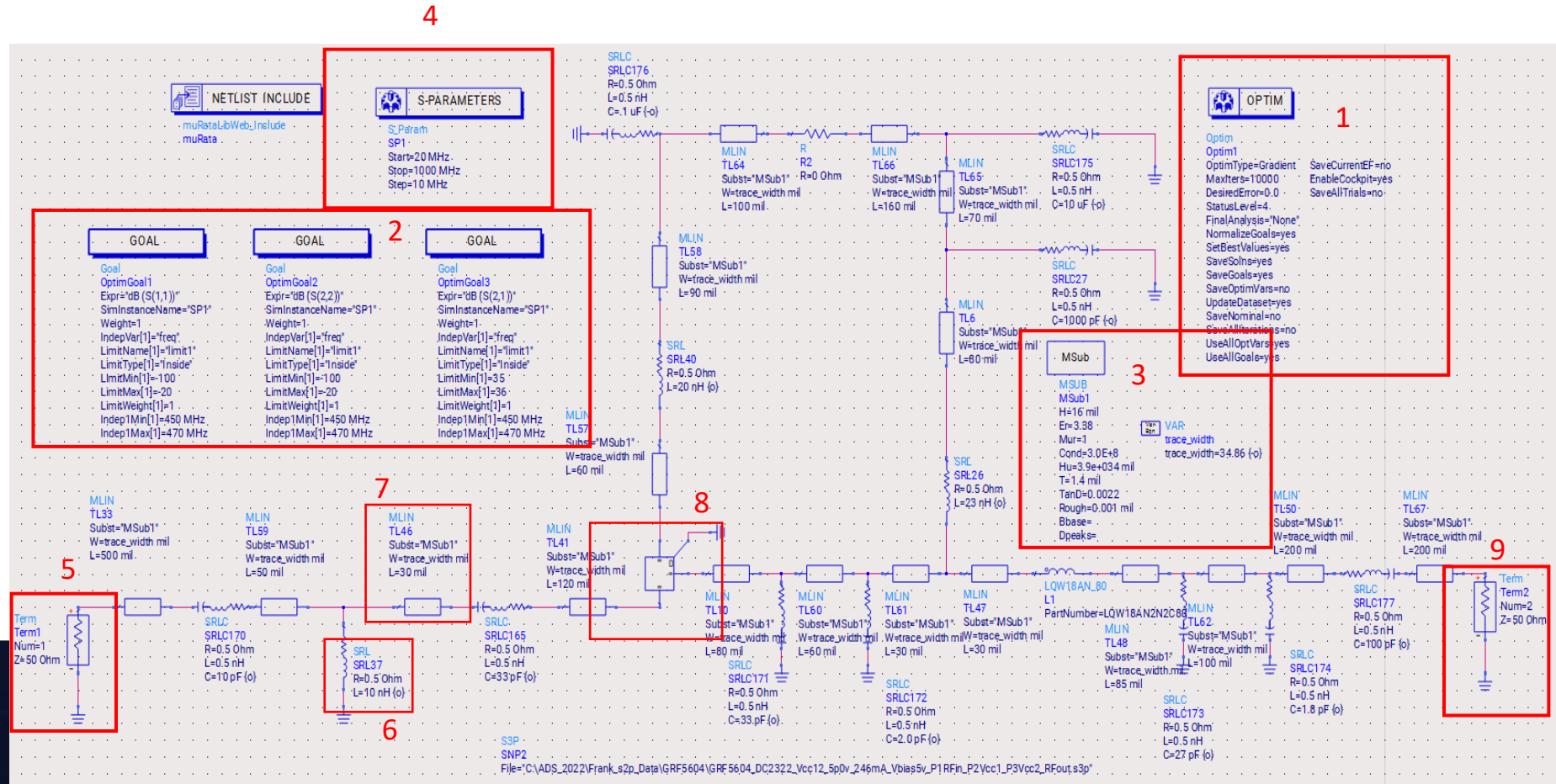

#1 & #2 – Optimization block and goals:

Allow us to use the ADS optimizer. We usually use OptimType = Gradient as this mode will zero in on best solution then stop. The other mode that works well is Random. The optimizer works to obtain Goals. See that we have goals for S11, S22, and S21. These can vary and help create return losses and center gain as desired.

```
OPTIM
Optim
Optim1
OptimType=Gradient        SaveCurrentEF=no
MaxIters=10000            EnableCockpit=yes
DesiredError=0.0          SaveAllTrials=no
StatusLevel=4
FinalAnalysis="None"
NormalizeGoals=yes
SetBestValues=yes
SaveSolns=yes
SaveGoals=yes
SaveOptimVars=no
UpdateDataset=yes
SaveNominal=no
SaveAllIterations=no
UseAllOptVars=yes
UseAllGoals=yes
```

```
GOAL
Goal
OptimGoal1
Expr="dB (S(1,1))"
SimInstanceName="SP1"
Weight=1
IndepVar[1]="freq"
LimitName[1]="limit1"
LimitType[1]="Inside"
LimitMin[1]=-100
LimitMax[1]=-20
LimitWeight[1]=1
Indep1Min[1]=450 MHz
Indep1Max[1]=470 MHz
```

```
GOAL
Goal
OptimGoal2
Expr="dB (S(2,2))"
SimInstanceName="SP1"
Weight=1
IndepVar[1]="freq"
LimitName[1]="limit1"
LimitType[1]="Inside"
LimitMin[1]=-100
LimitMax[1]=-20
LimitWeight[1]=1
Indep1Min[1]=450 MHz
Indep1Max[1]=470 MHz
```

```
GOAL
Goal
OptimGoal3
Expr="dB (S(2,1))"
SimInstanceName="SP1"
Weight=1
IndepVar[1]="freq"
LimitName[1]="limit1"
LimitType[1]="Inside"
LimitMin[1]=35
LimitMax[1]=36
LimitWeight[1]=1
Indep1Min[1]=450 MHz
Indep1Max[1]=470 MHz
```

#3 – PCB substrate and trace width variable: Substrate parameters are not critical. Trace width needs to be such that trace impedance = 50 ohm. This was established in a separate simulation where trace width was optimized for 50 ohm impedance.

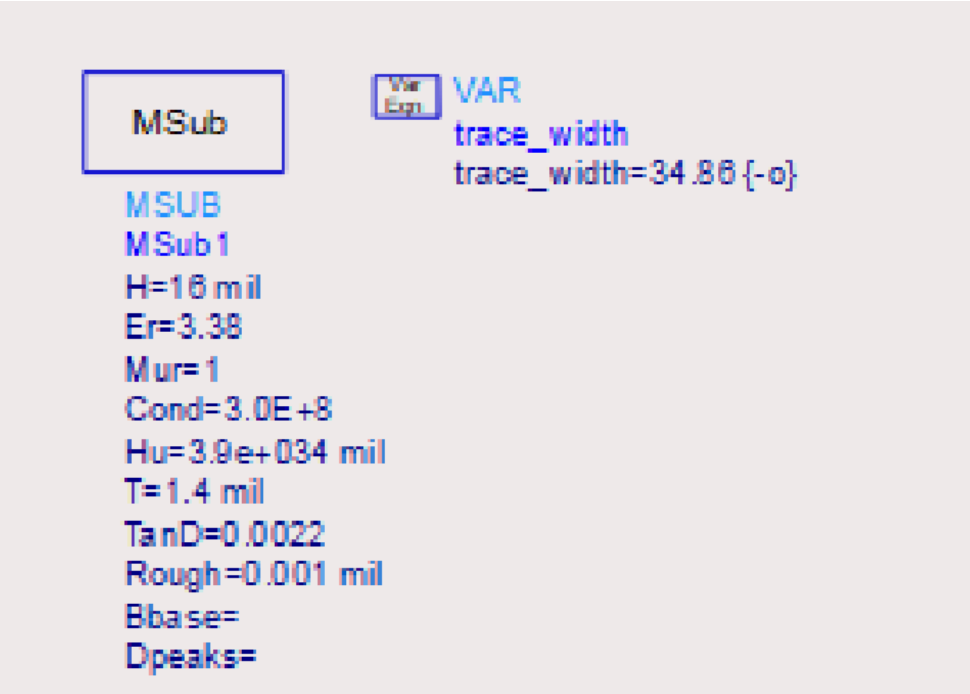

#4 – .s2p simulation, #5 - .s2p port 1, #9 - .s2p port 2: these three are required to run the .s2p simulation along with device.s3p file.

While the S-Parameter file is a .s3p we are looking at an output of an .s2p, the S3P file allows us to include the interstage, PA stage 1, matching contribution.

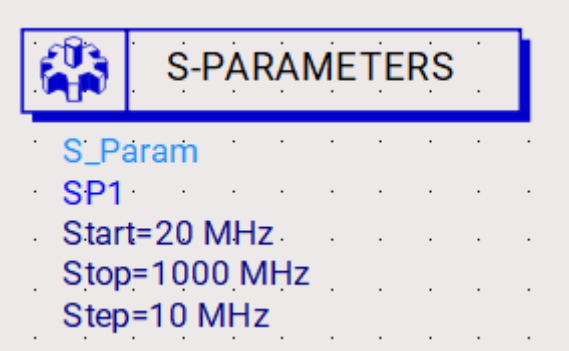

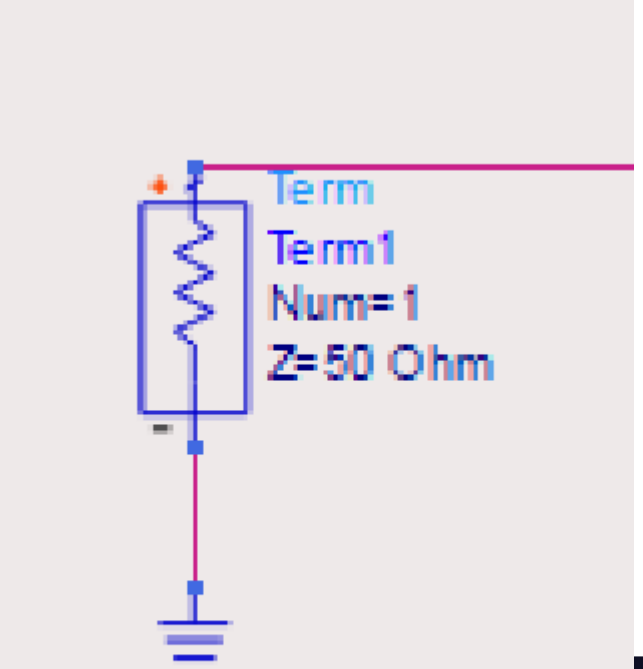

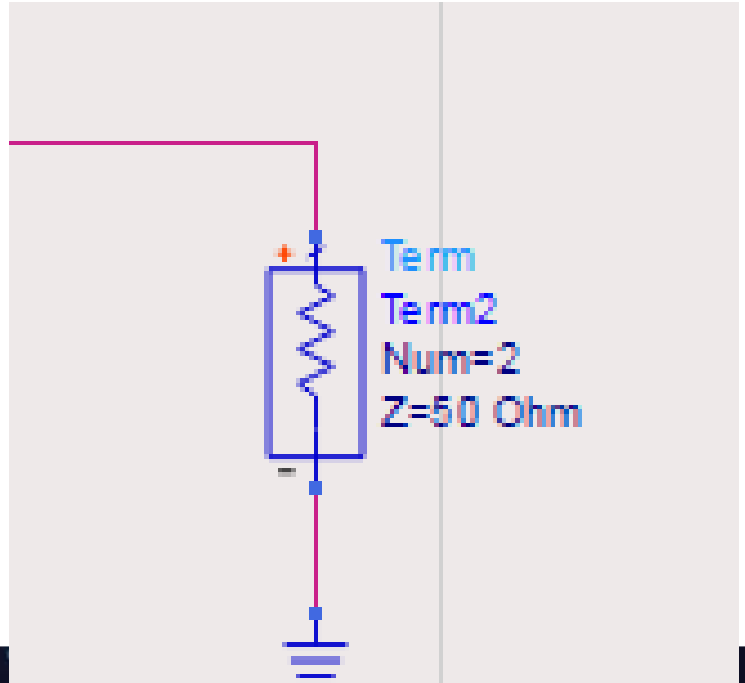

#8 – GRF5604 .s3p file: the basis for our .s2p simulation output = .s3p de-embedded to device pins allows for a more accurately model close to the matched device.

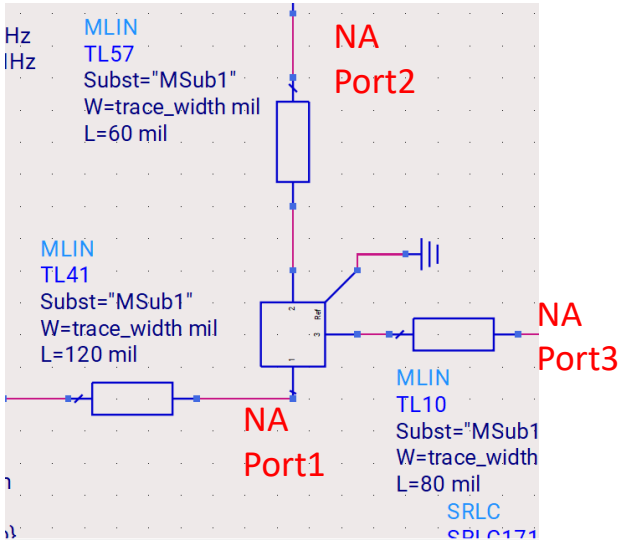

#6 – matching component models and #7 – 50 ohm trace model:

We use hand built L/C/R models as shown, with “optimize” handle enabled (o) or disabled (-0).

These models, perhaps not perfectly accurate, have historically yielded very good results that repeat when the actual board is built.

Trace lengths are used as well since EVB has them in place. They can be measured with a caliper on EVB and entered here in mil. See we use “MLIN” model. Coplanar wave guide (CPWG) model can also be used, but either seem to work just as well. See that the MLIN has the “trace_width” parameter discussed in slide 5.

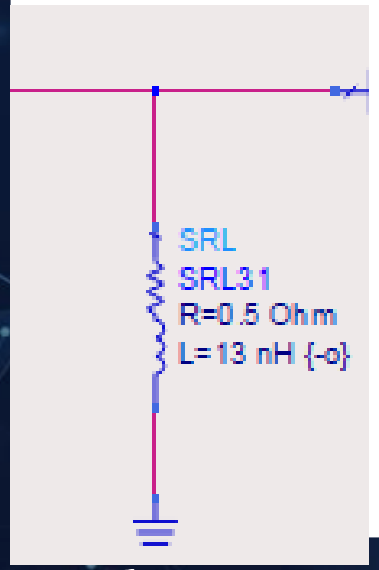

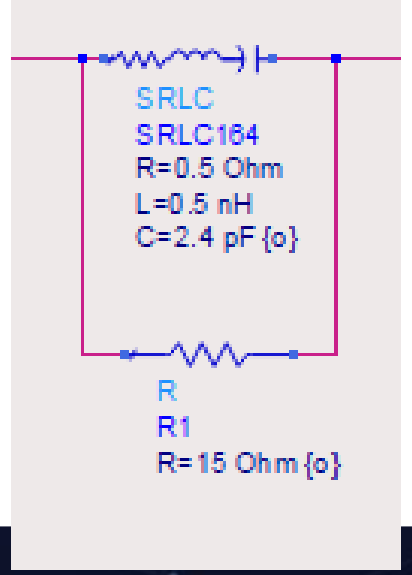

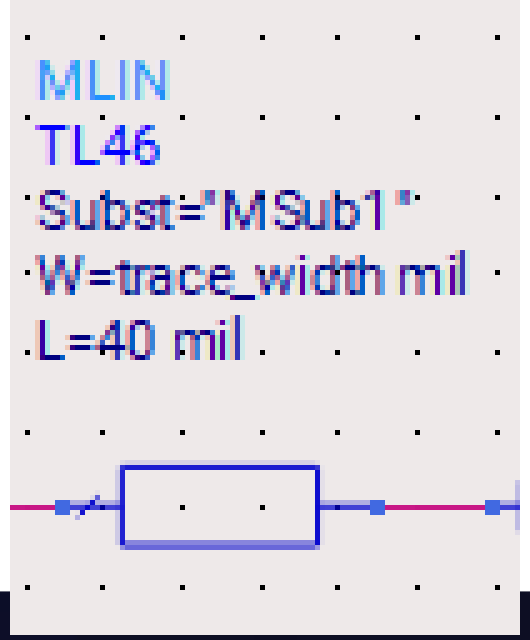

Actual data vs. ADS sim in this presentation

Sim setup
using S3P

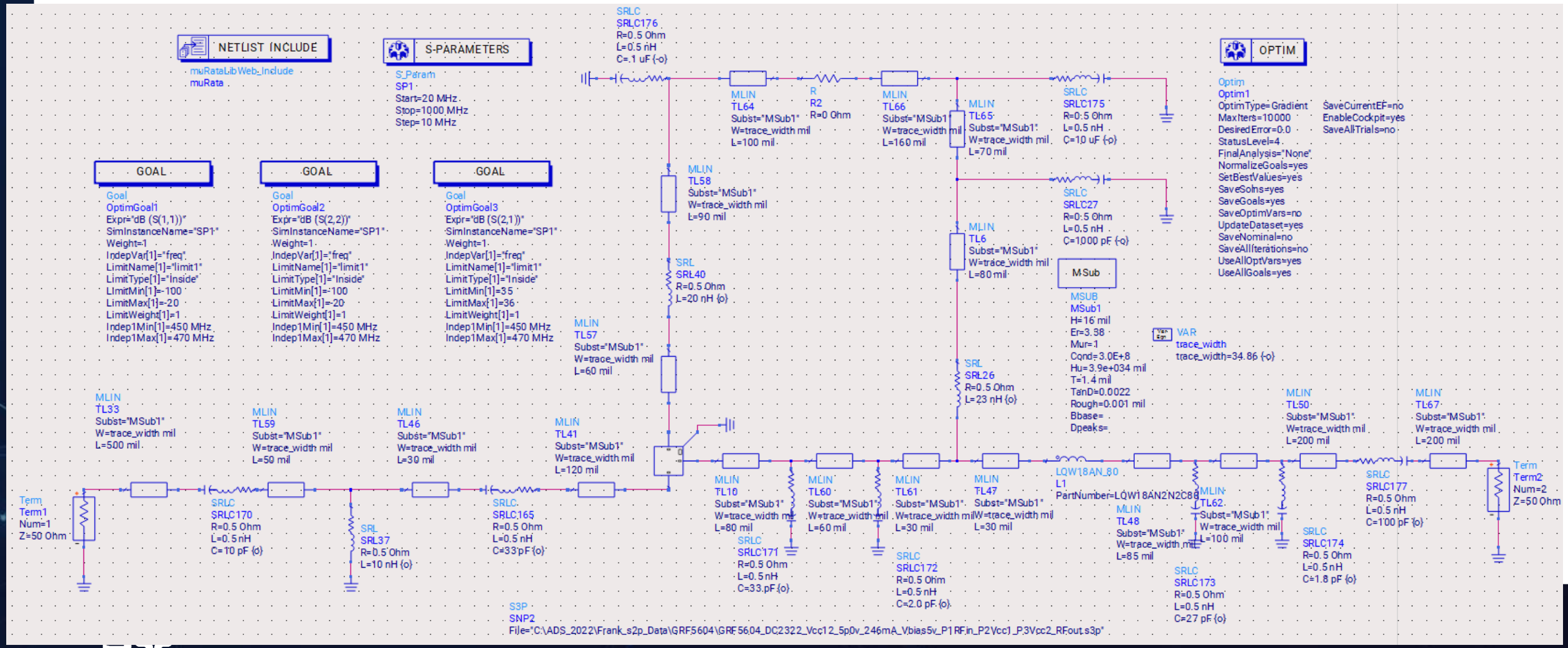

Sim output
using S3P

m1	m2	m3
freq=450.0 MHz	freq=460.0 MHz	freq=470.0 MHz
dB(S(1,1))=-9.234	dB(S(1,1))=-10.008	dB(S(1,1))=-10.045
dB(S(2,1))=36.915	dB(S(2,1))=36.387	dB(S(2,1))=36.024
dB(S(2,2))=-10.915	dB(S(2,2))=-13.005	dB(S(2,2))=-14.297

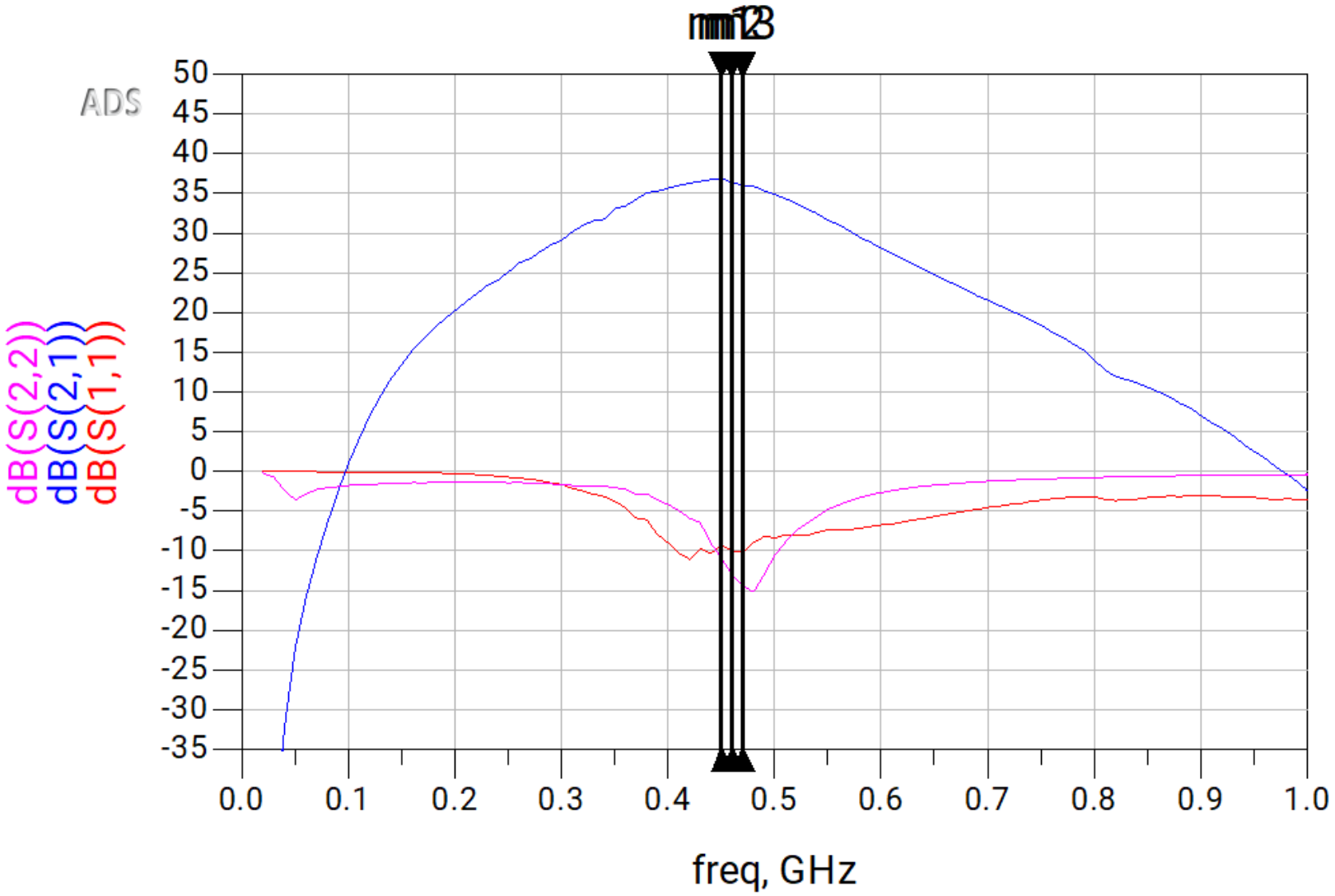

Actual EVB BOM

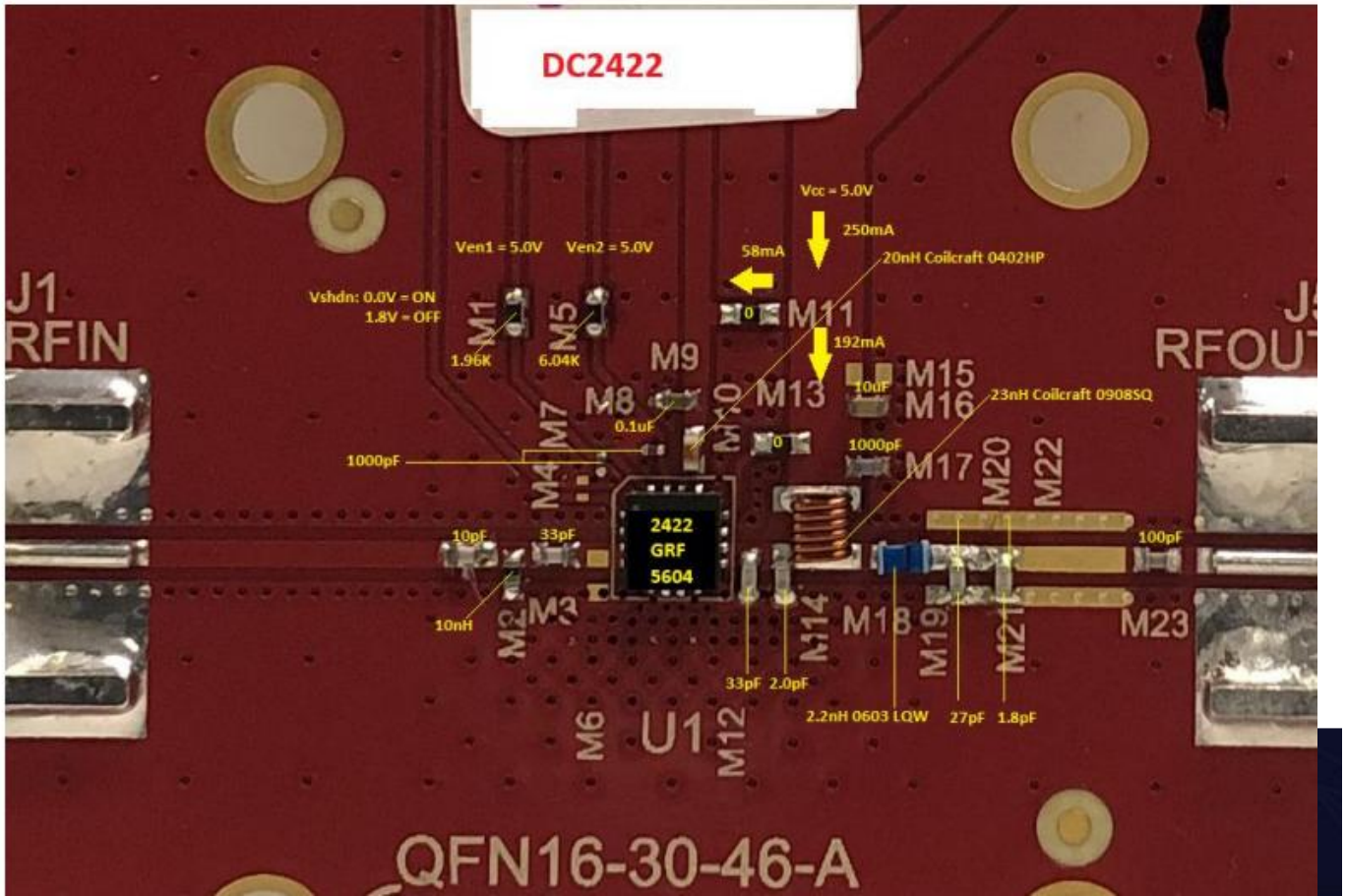

Actual EVB Measured S-Parameters

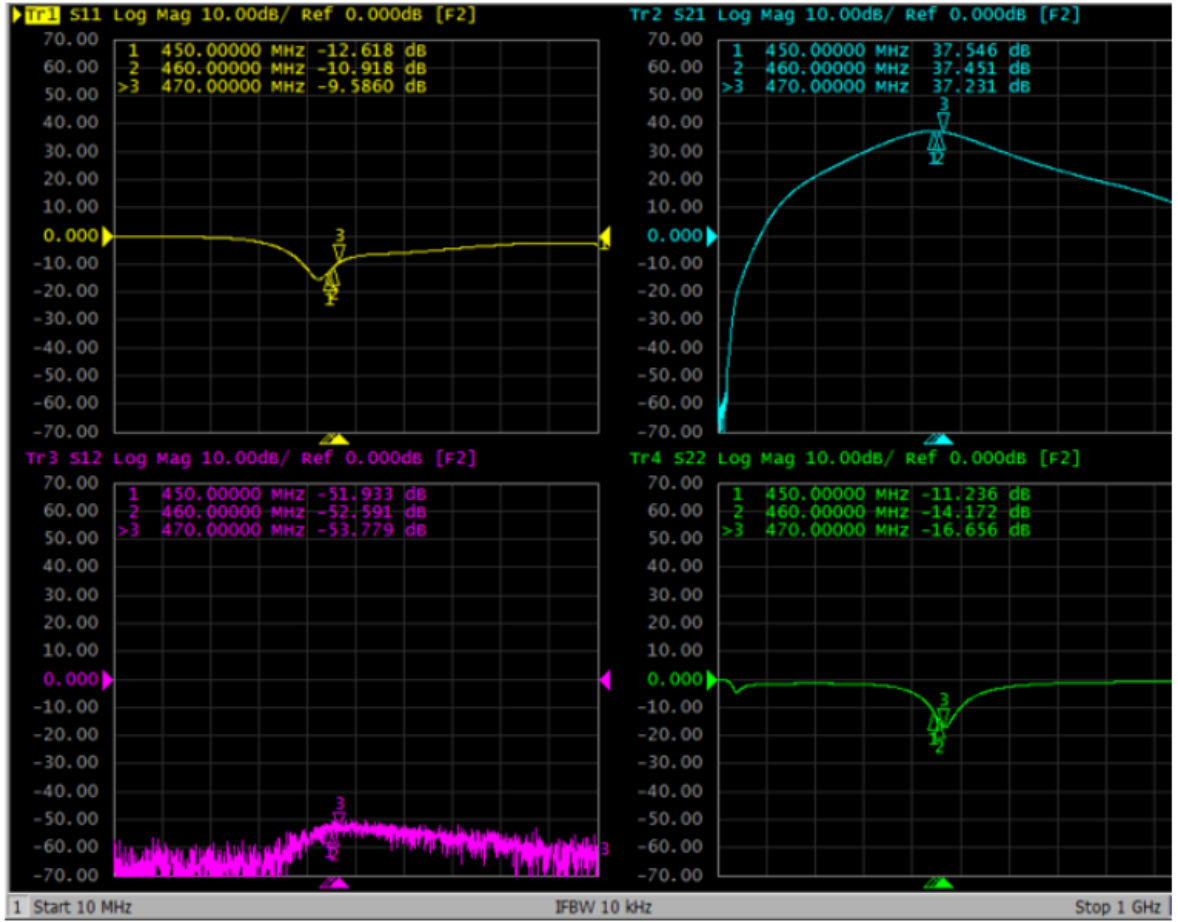

Contact Us

Chris Rose
Senior Staff Applications Engineer
crose@guerrilla-rf.com
336-848-1312