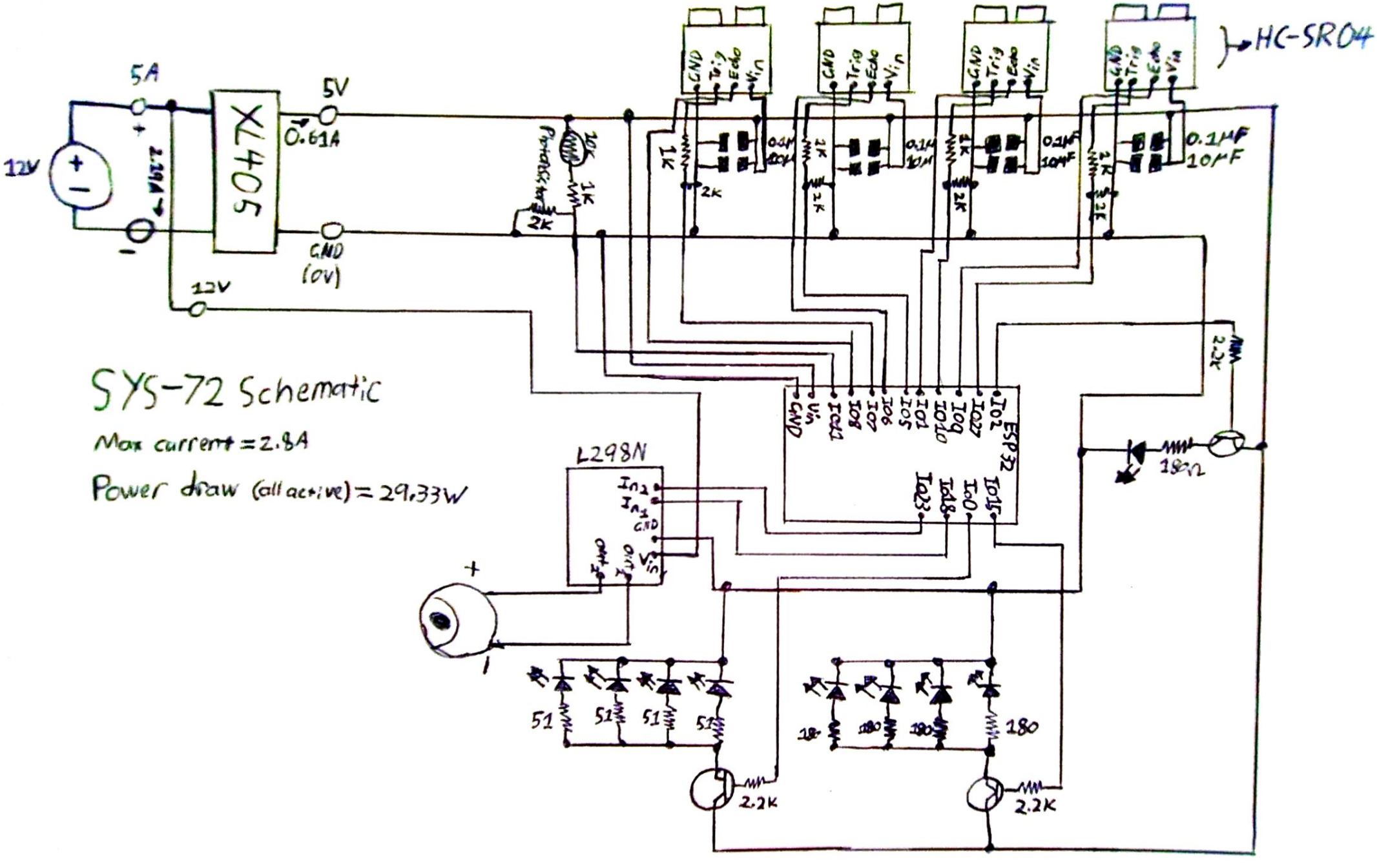

SYS-72 Schematic

Max current = 2.8A

Power draw (all active) = 29.33W