BVMv1.1.vi Block Diagram

File Edit View Project Operate Tools Window Help

15pt Application Font

Search

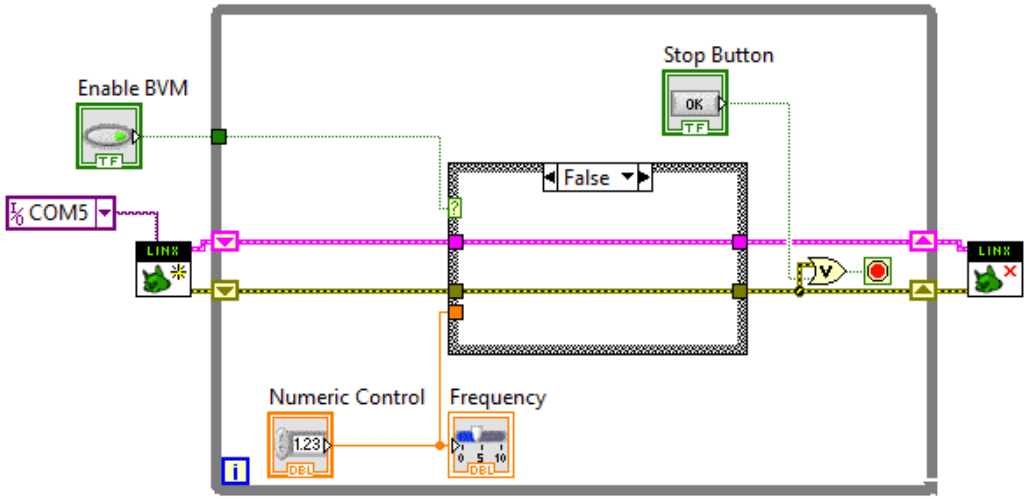

NATIONAL INSTRUMENTS
LabVIEW Student Edition

Main Application Instance

1:31 PM
9/19/2016