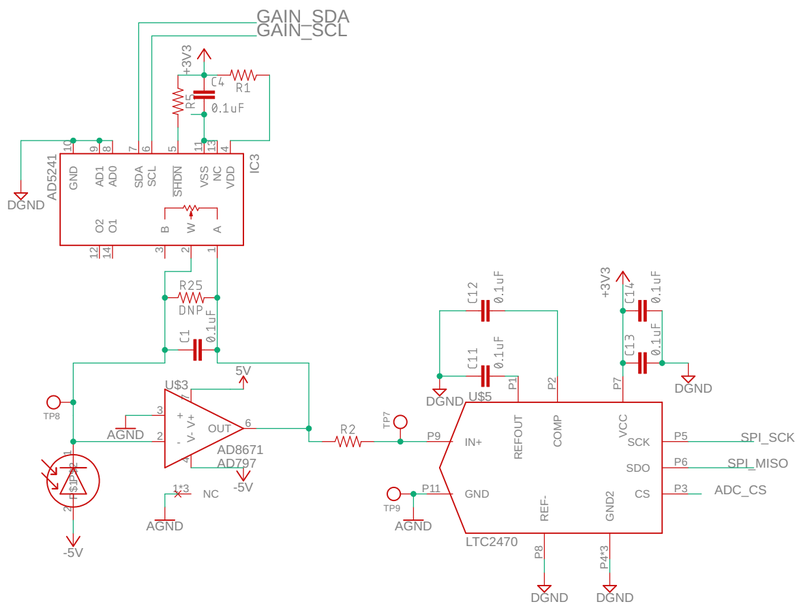

Analog Front End

1) Uses AD797 or AD8671 op-amp with minimal current noise
2) Uses 10K I2C digital resistor for programmable gain
3) Uses 16bit Sigma-Delta ADC with SPI output for analog to digital conversion
4) Optional R25 feedback resistor - use in place of IC3

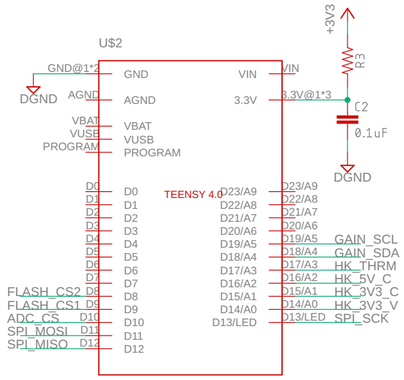

Microcontroller

1) Teensy 4.0
2) Requires 1 SPI bus
3) Requires 1 I2C bus
4) Analog inputs used for housekeeping signals

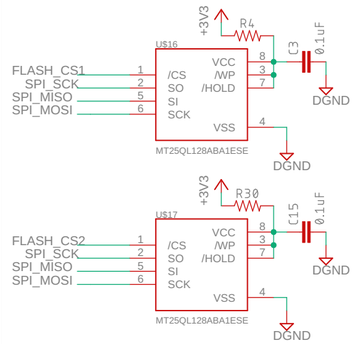

Flash memory

1) 128Mbit minimum
2) 2 chips for redundancy
3) SPI interface

NanoSAM Electronics Board	
TITLE: nanoSAM	
Document Number:	REV: A
Date: not saved!	Sheet: 1/2

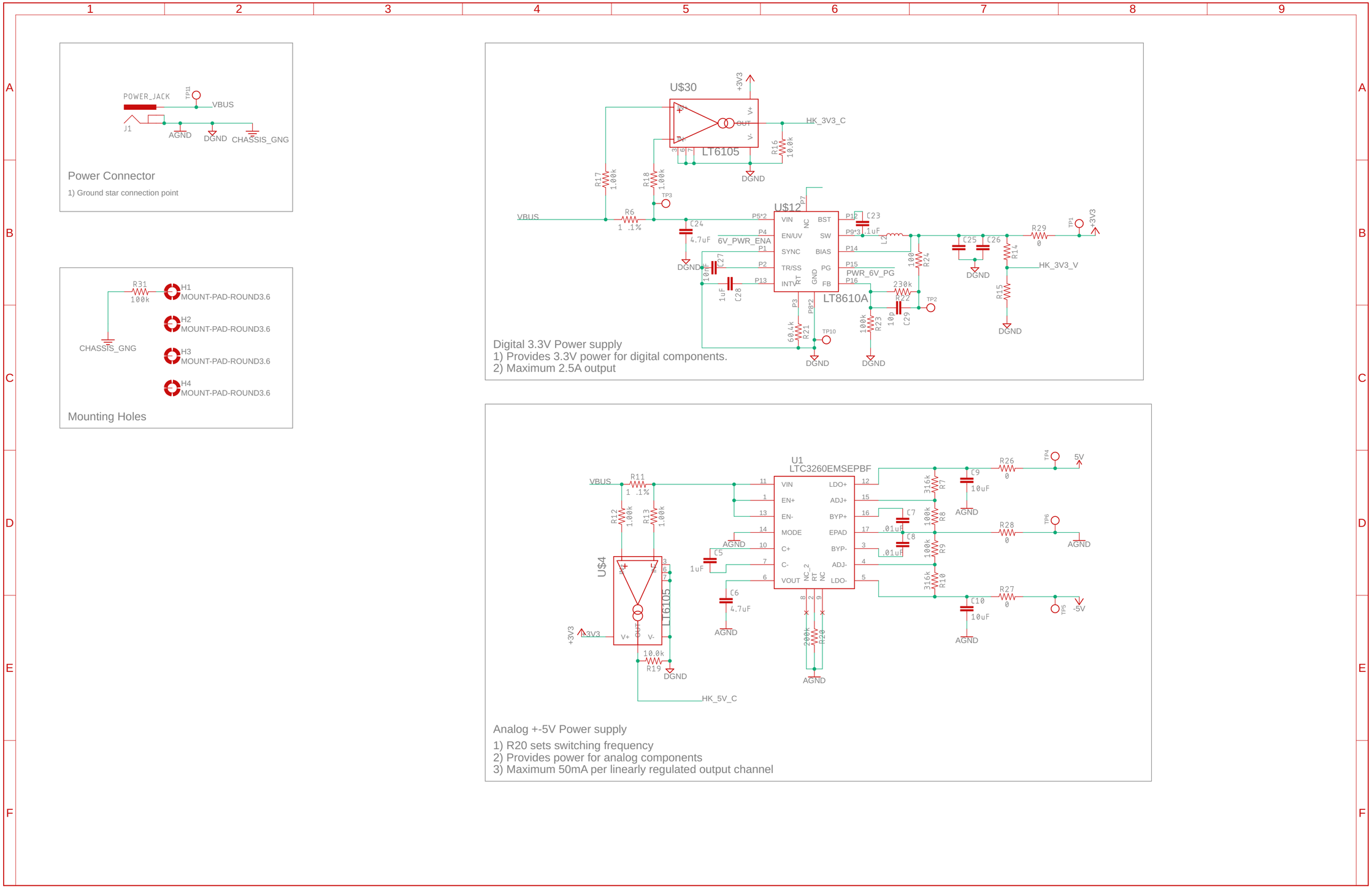
POWER_JACK
TP11
VBUS
J1
AGND
DGND
CHASSIS_GNG
Power Connector
1) Ground star connection point
R31
100k
H1
MOUNT-PAD-ROUND3.6
H2
MOUNT-PAD-ROUND3.6
H3
MOUNT-PAD-ROUND3.6
H4
MOUNT-PAD-ROUND3.6
CHASSIS_GNG
Mounting Holes
U$30
+3V3
HK_3V3_C
LT6105
R16
10.0k
R17
1.00k
R18
1.00k
TP3
VBUS
R6
1 .1%
C24
4.7uF
U$12
VIN
BST
EN/UV
SW
SYNC
BIAS
TR/SS
PG
INTV
FB
LT8610A
6V_PWR_ENA
PWR_6V_PG
C23
.1uF
L2
100
R24
C25
C26
R29
0
TP1
HK_3V3_V
R14
R15
C27
10uF
C28
1uF
230k
R22
TP2
C29
10p
100k
R23
60.4k
R21
TP10
DGND
Digital 3.3V Power supply
1) Provides 3.3V power for digital components.
2) Maximum 2.5A output
U1
LTC3260EMSEPBF
VIN
EN+
EN-
MODE
C+
C-
VOUT
LDO+
ADJ+
BYP+
EPAD
BYP-
ADJ-
LDO-
VBUS
R11
1 .1%
R12
1.00k
R13
1.00k
U$4
LT6105
+3V3
10.0k
R19
HK_5V_C
AGND
C5
1uF
C6
4.7uF
C7
.01uF
C8
.01uF
316k
R7
100k
R8
100k
R9
316k
R10
C9
10uF
C10
10uF
R26
0
R28
0
R27
0
TP4
5V
TP6
TP5
-5V
200k
R20
Analog +-5V Power supply
1) R20 sets switching frequency
2) Provides power for analog components
3) Maximum 50mA per linearly regulated output channel