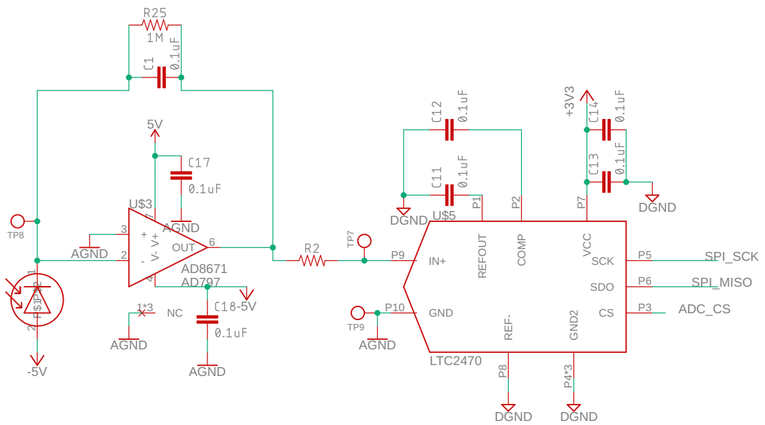

Analog Front End

1) Uses AD797 or AD8671 op-amp with minimal current noise
2) Uses 10K I2C digital resistor for programmable gain
3) Uses 16bit Sigma-Delta ADC with SPI output for analog to digital conversion
4) Optional R25 feedback resistor - use in place of IC3

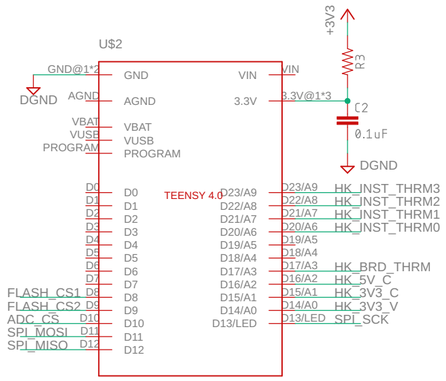

Microcontroller

1) Teensy 4.0
2) SPI bus for ADC and flash
4) Analog inputs used for housekeeping signals

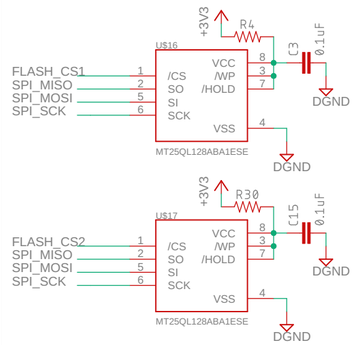

Flash memory

1) 128Mbit minimum
2) 2 chips for redundancy
3) SPI interface

NanoSAM Electronics Board	
TITLE: nanoSAM	
Document Number:	REV: A
Date: 12/1/19 1:08 PM	Sheet: 1/2

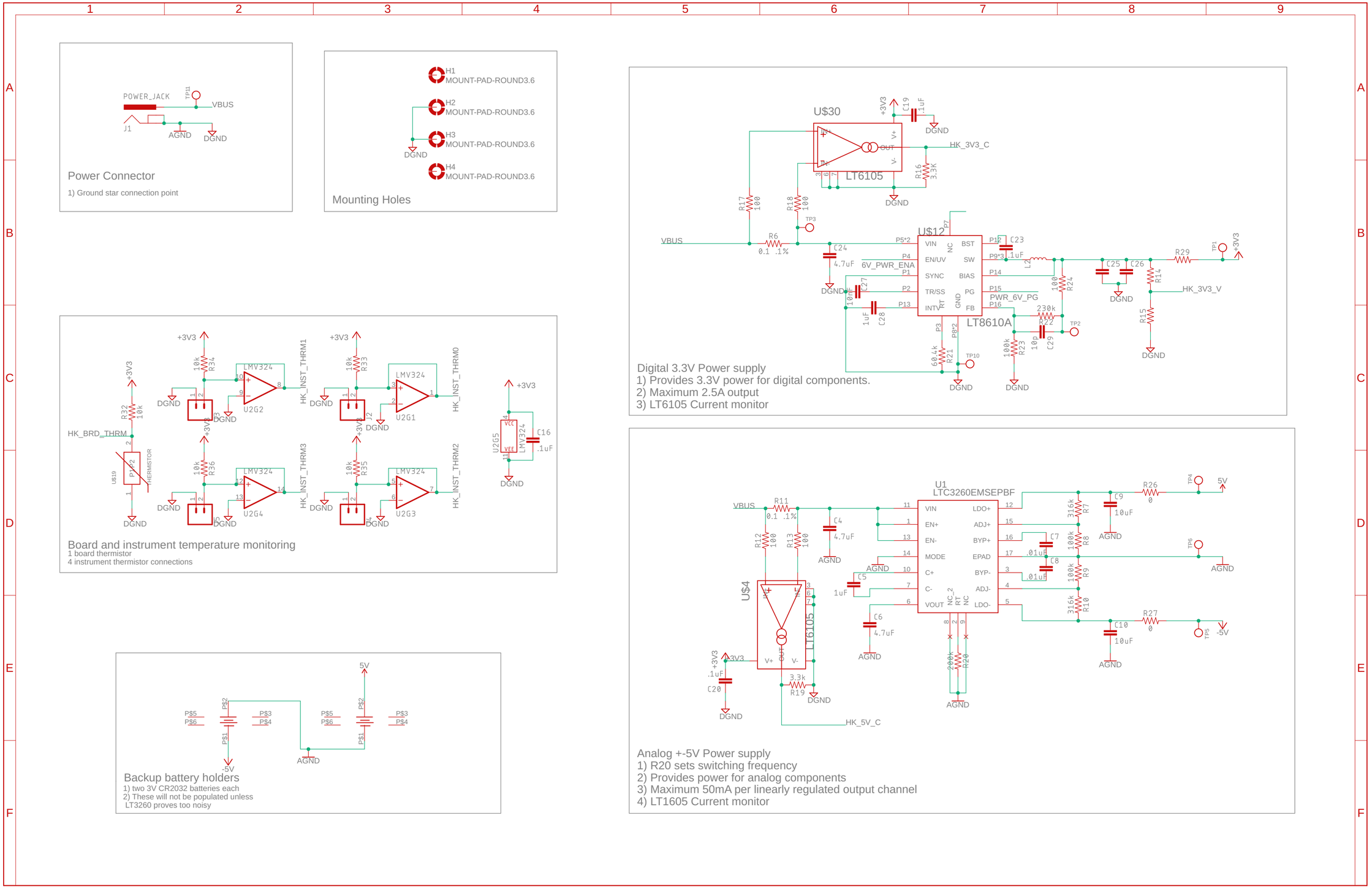
POWER_JACK
TP11
VBUS
J1
AGND
DGND
Power Connector
1) Ground star connection point
H1 MOUNT-PAD-ROUND3.6
H2 MOUNT-PAD-ROUND3.6
H3 MOUNT-PAD-ROUND3.6
H4 MOUNT-PAD-ROUND3.6
Mounting Holes
U$30
LT6105
HK_3V3_C
R16 3.3K
R17 100
R18 100
TP3
VBUS
R6 0.1 .1%
C24 4.7uF
U$12
LT8610A
6V_PWR_ENA
PWR_6V_PG
C23 .1uF
L2
R24 100
C25
C26
R29
R14
HK_3V3_V
R15
R22 230k
C29 10p
R23 100k
R21 604k
TP10
TP2
TP1
+3V3
Digital 3.3V Power supply
1) Provides 3.3V power for digital components.
2) Maximum 2.5A output
3) LT6105 Current monitor
HK_BRD_THRM
R32 10k
U$19
PT1.2
THERMISTOR
R34 10k
R33 10k
R36 10k
R35 10k
LMV324
U2G2
U2G1
U2G4
U2G3
U2G5
C16 .1uF
HK_INST_THRM1
HK_INST_THRM0
HK_INST_THRM3
HK_INST_THRM2
Board and instrument temperature monitoring
1 board thermistor
4 instrument thermistor connections
U1
LTC3260EMSEPBF
R11 0.1 .1%
R12 100
R13 100
C4 4.7uF
C5 1uF
C6 4.7uF
C7 .01uF
C8 .01uF
R7 316k
R8 100k
R9 100k
R10 316k
C9 10uF
C10 10uF
R26 0
R27 0
TP4
TP6
TP5
5V
-5V
U$4
LT6105
C20 .1uF
R19 3.3k
R20 200k
HK_5V_C
Analog +-5V Power supply
1) R20 sets switching frequency
2) Provides power for analog components
3) Maximum 50mA per linearly regulated output channel
4) LT1605 Current monitor
P$5
P$6
P$2
P$3
P$4
P$1
Backup battery holders
1) two 3V CR2032 batteries each
2) These will not be populated unless
LT3260 proves too noisy