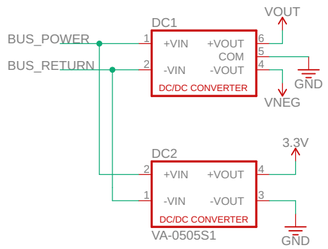


## Voltage Regulators

1) Bipolar 5V? output for transimpedance amplifier
2) 3.3V output for digital devices
3) Likely to add a linear regulator for ADC reference voltage

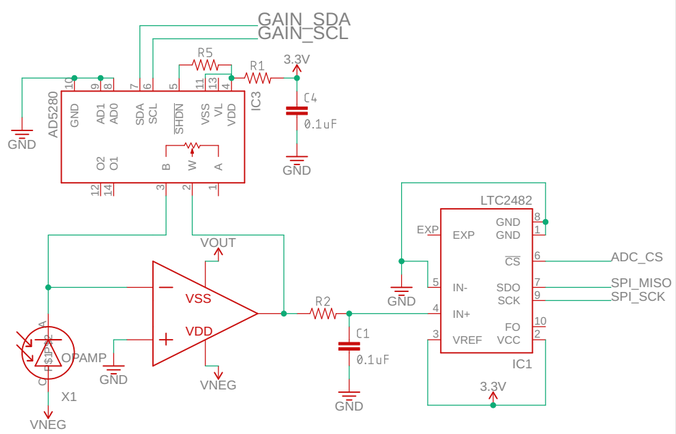


## Analog Front End

1) Uses transimpedance op-amp with minimal current noise
2) Uses 10K I2C digital resistor for programmable gain
3) Uses 16bit Sigma-Delta ADC with SPI output for analog to digital conversion

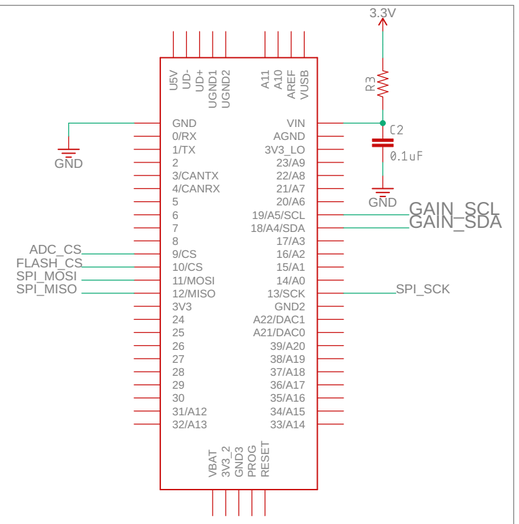


## Microcontroller

1) Teensy 4.0 placeholder
2) Requires 1 SPI bus
3) Requires 1 I2C bus

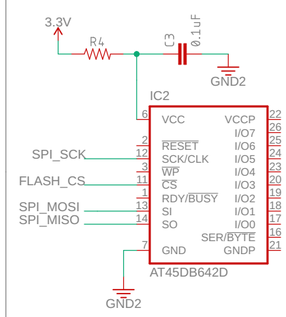


## Flash memory

1) 128Mbit minimum
2) Likely to add a second for redundancy
3) SPI interface

| | |
|---|---|
| TITLE: nanoSAM | |
| Document Number: | REV: |
| Date: 10/12/19 1:27 PM | Sheet: 1/1 |