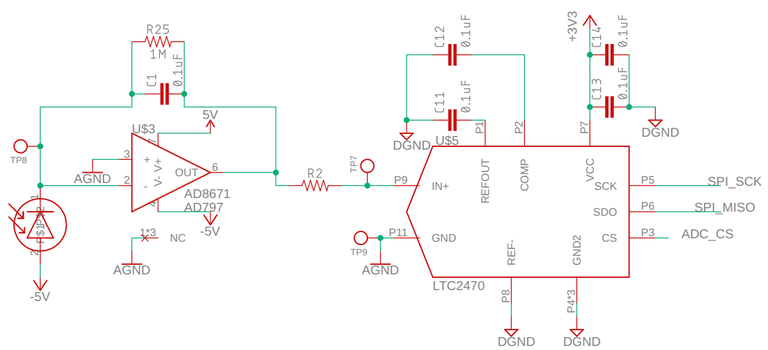


## Analog Front End

1) Uses AD797 or AD8671 op-amp with minimal current noise
2) Uses 10K I2C digital resistor for programmable gain
3) Uses 16bit Sigma-Delta ADC with SPI output for analog to digital conversion
4) Optional R25 feedback resistor - use in place of IC3

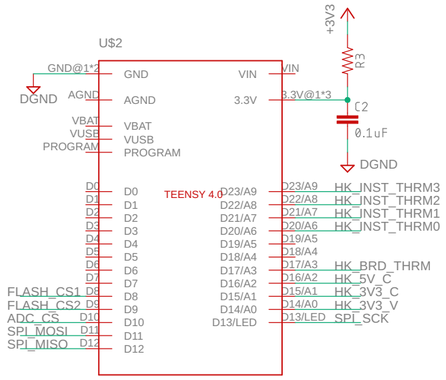


## Microcontroller

1) Teensy 4.0
2) SPI bus for ADC and flash
4) Analog inputs used for housekeeping signals

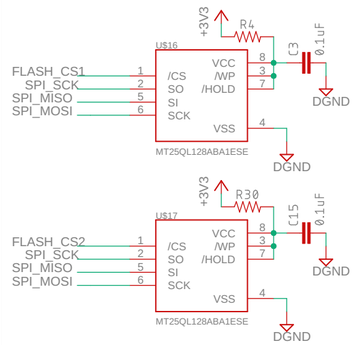


## Flash memory

1) 128Mbit minimum
2) 2 chips for redundancy
3) SPI interface

NanoSAM Electronics Board

TITLE: nanoSAM

Document Number:

REV: A

Date: 11/21/19 2:02 PM

Sheet: 1/2

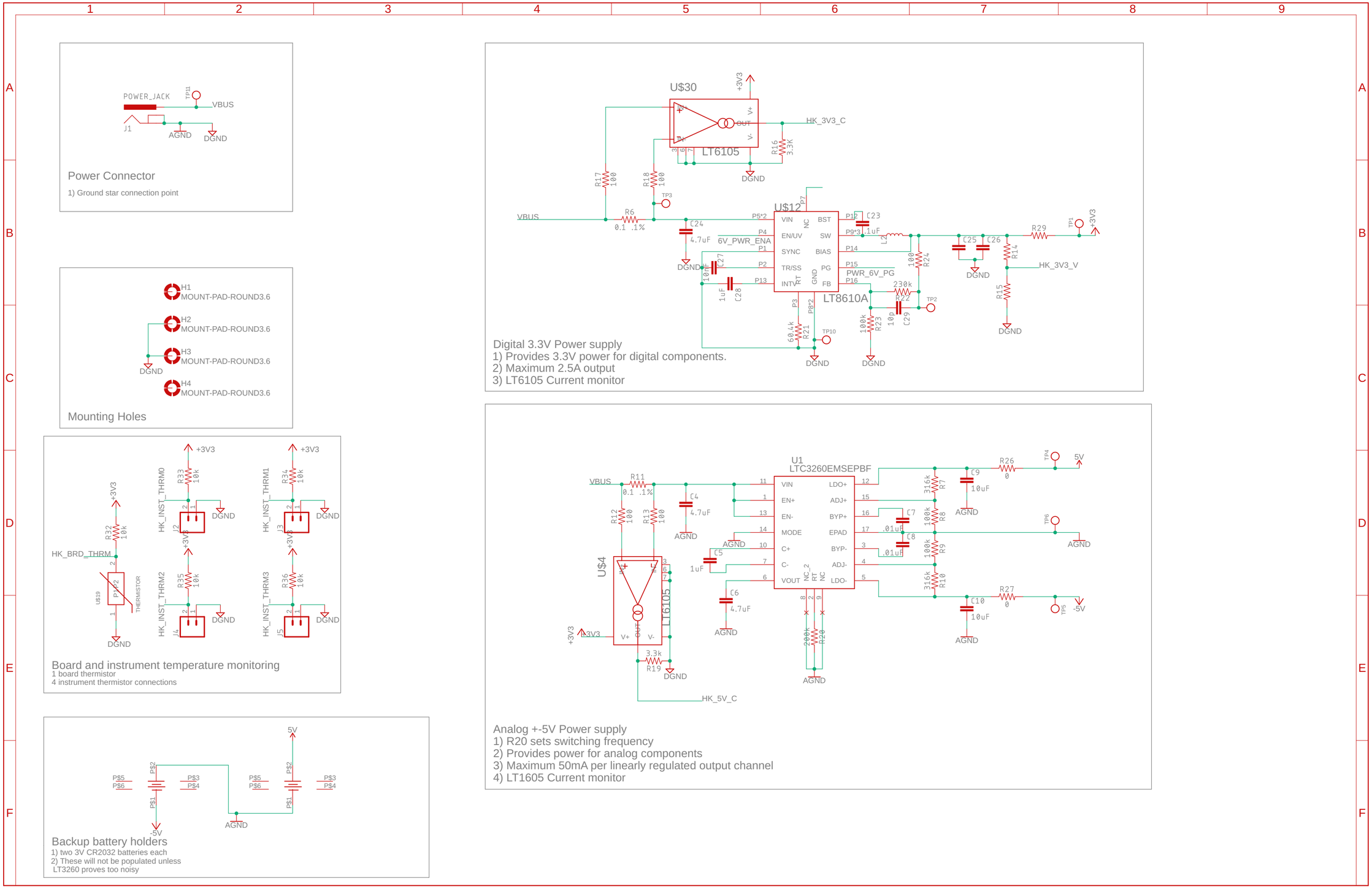
POWER_JACK
TP11
VBUS
J1
AGND
DGND
Power Connector
1) Ground star connection point
H1 MOUNT-PAD-ROUND3.6
H2 MOUNT-PAD-ROUND3.6
H3 MOUNT-PAD-ROUND3.6
H4 MOUNT-PAD-ROUND3.6
Mounting Holes
U$30
LT6105
HK_3V3_C
R16 3.3k
R17 100
R18 100
TP3
VBUS
R6 0.1 .1%
C24 4.7uF
U$12
LT8610A
VIN
EN/UV
SYNC
TR/SS
INTV
NC
BST
SW
BIAS
PG
FB
GND
6V_PWR_ENA
PWR_6V_PG
C23 .1uF
L2
R24 100
C25
C26
R29
TP1
+3V3
R14
HK_3V3_V
R15
C27 100uF
C28 1uF
R22 230k
C29 10p
R23 100k
R21 604k
TP10
TP2
Digital 3.3V Power supply
1) Provides 3.3V power for digital components.
2) Maximum 2.5A output
3) LT6105 Current monitor
U1
LTC3260EMSEPBF
VIN
EN+
EN-
MODE
C+
C-
VOUT
LDO+
ADJ+
BYP+
EPAD
BYP-
ADJ-
LDO-
R11 0.1 .1%
R12 100
R13 100
C4 4.7uF
C5 1uF
C6 4.7uF
C7 .01uF
C8 .01uF
R7 316k
R8 100k
R9 100k
R10 316k
C9 10uF
C10 10uF
R26 0
R27 0
TP4
5V
TP6
TP5
-5V
AGND
U$4
LT6105
3.3k
R19
HK_5V_C
Analog +-5V Power supply
1) R20 sets switching frequency
2) Provides power for analog components
3) Maximum 50mA per linearly regulated output channel
4) LT1605 Current monitor
R32 10k
HK_BRD_THRM
U$19
THERMISTOR
HK_INST_THRM0
HK_INST_THRM1
HK_INST_THRM2
HK_INST_THRM3
R33 10k
R34 10k
R35 10k
R36 10k
J2
J3
J4
J5
Board and instrument temperature monitoring
1 board thermistor
4 instrument thermistor connections
P$5
P$6
P$2
P$1
P$3
P$4
-5V
Backup battery holders
1) two 3V CR2032 batteries each
2) These will not be populated unless
LT3260 proves too noisy