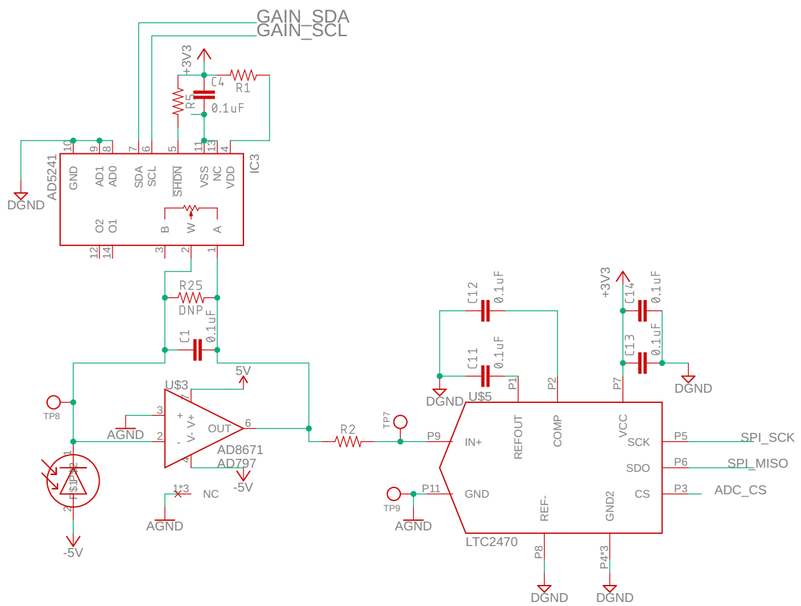

Analog Front End

1) Uses AD797 or AD8671 op-amp with minimal current noise
2) Uses 10K I2C digital resistor for programmable gain
3) Uses 16bit Sigma-Delta ADC with SPI output for analog to digital conversion
4) Optional R25 feedback resistor - use in place of IC3

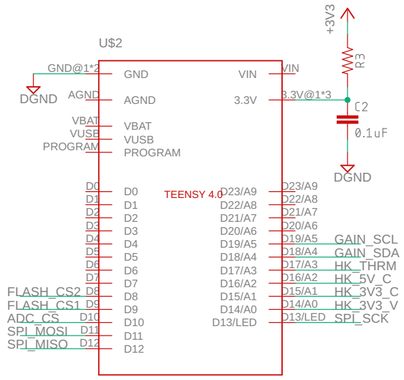

Microcontroller

1) Teensy 4.0
2) Requires 1 SPI bus
3) Requires 1 I2C bus
4) Analog inputs used for housekeeping signals

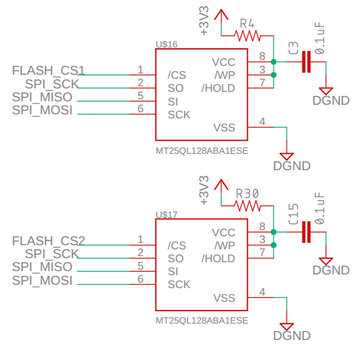

Flash memory

1) 128Mbit minimum
2) 2 chips for redundancy
3) SPI interface

NanoSAM Electronics Board	
TITLE: nanoSAM	
Document Number:	REV: A
Date: 11/12/19 12:32 PM	Sheet: 1/2

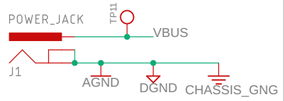

Power Connector

1) Ground star connection point

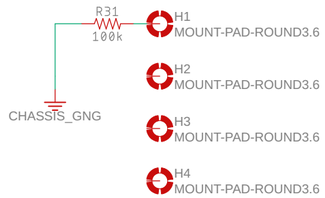

Mounting Holes

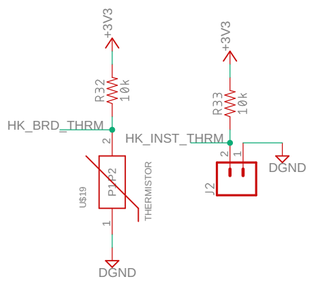

Board and instrument temperature monitoring

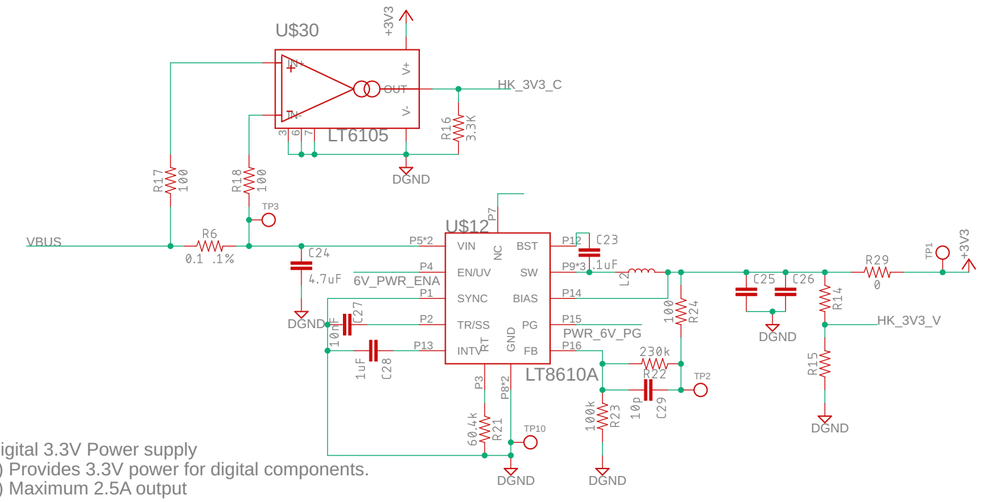

Digital 3.3V Power supply

1) Provides 3.3V power for digital components.

2) Maximum 2.5A output

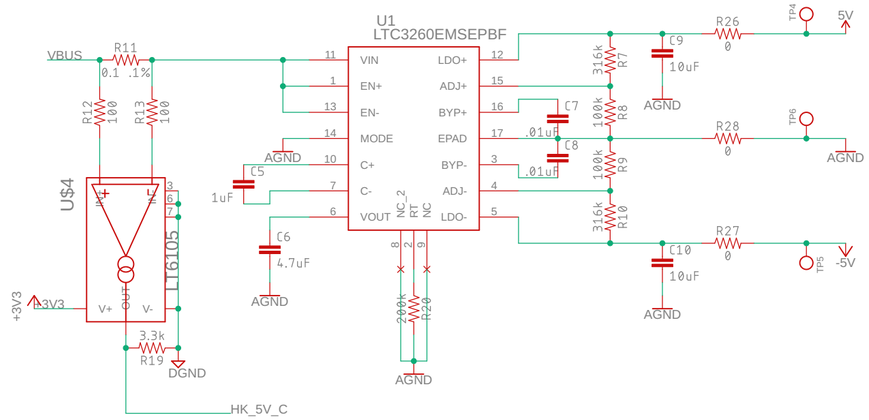

Analog +-5V Power supply

1) R20 sets switching frequency

2) Provides power for analog components

3) Maximum 50mA per linearly regulated output channel