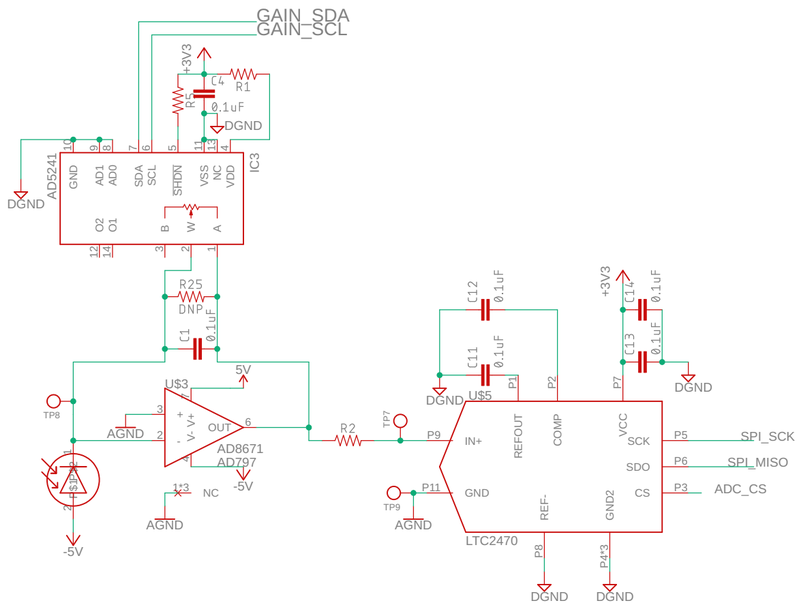

Analog Front End

1) Uses AD797 or AD8671 op-amp with minimal current noise
2) Uses 10K I2C digital resistor for programmable gain
3) Uses 16bit Sigma-Delta ADC with SPI output for analog to digital conversion
4) Optional R25 feedback resistor - use in place of IC3

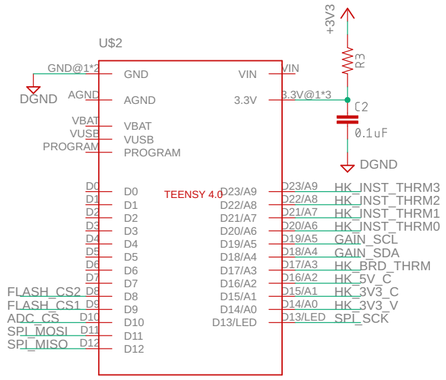

Microcontroller

1) Teensy 4.0
2) Requires 1 SPI bus
3) Requires 1 I2C bus
4) Analog inputs used for housekeeping signals

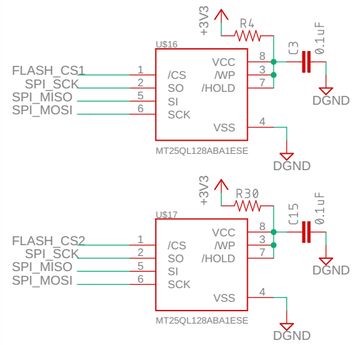

Flash memory

1) 128Mbit minimum
2) 2 chips for redundancy
3) SPI interface

NanoSAM Electronics Board	
TITLE: nanoSAM	
Document Number:	REV: A
Date: 11/13/19 1:20 PM	Sheet: 1/2

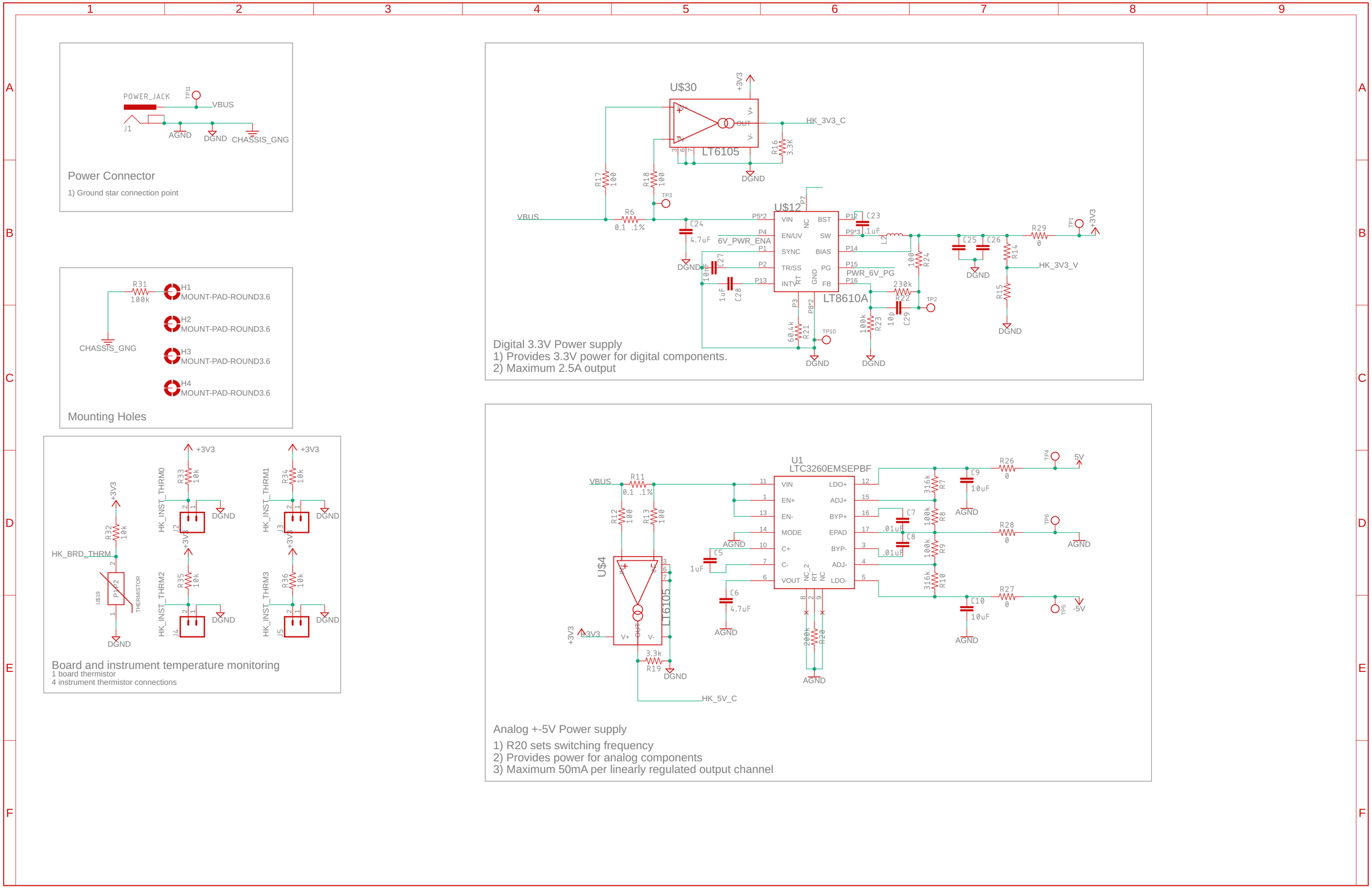
POWER_JACK
TP11
VBUS
J1
AGND
DGND
CHASSIS_GNG
Power Connector
1) Ground star connection point
R31
100k
H1
MOUNT-PAD-ROUND3.6
H2
MOUNT-PAD-ROUND3.6
H3
MOUNT-PAD-ROUND3.6
H4
MOUNT-PAD-ROUND3.6
CHASSIS_GNG
Mounting Holes
U$30
LT6105
+3V3
HK_3V3_C
R16
3.3k
R17
100
R18
100
TP3
VBUS
R6
0.1 .1%
C24
4.7uF
U$12
LT8610A
VIN
EN/UV
SYNC
TR/SS
INTV
NC
BST
SW
BIAS
PG
FB
GND
6V_PWR_ENA
PWR_6V_PG
C23
.1uF
L2
100
R24
C25
C26
R29
0
TP1
HK_3V3_V
R14
R15
C27
100nF
C28
1uF
R22
230k
C29
10p
TP2
R23
100k
R21
60.4k
TP10
DGND
Digital 3.3V Power supply
1) Provides 3.3V power for digital components.
2) Maximum 2.5A output
U1
LTC3260EMSEPBF
VIN
EN+
EN-
MODE
C+
C-
VOUT
LDO+
ADJ+
BYP+
EPAD
BYP-
ADJ-
LDO-
NC_2
RT
NC
VBUS
R11
0.1 .1%
R12
100
R13
100
U$4
LT6105
3.3k
R19
HK_5V_C
C5
1uF
C6
4.7uF
AGND
C7
.01uF
C8
.01uF
316k
R7
100k
R8
100k
R9
316k
R10
C9
10uF
C10
10uF
R26
0
R28
0
R27
0
TP4
5V
TP6
TP5
-5V
R20
Analog +-5V Power supply
1) R20 sets switching frequency
2) Provides power for analog components
3) Maximum 50mA per linearly regulated output channel
R32
10k
HK_BRD_THRM
U$19
P1-2
THERMISTOR
R33
10k
HK_INST_THRM0
J2
R34
10k
HK_INST_THRM1
J3
R35
10k
HK_INST_THRM2
J4
R36
10k
HK_INST_THRM3
J5
Board and instrument temperature monitoring
1 board thermistor
4 instrument thermistor connections