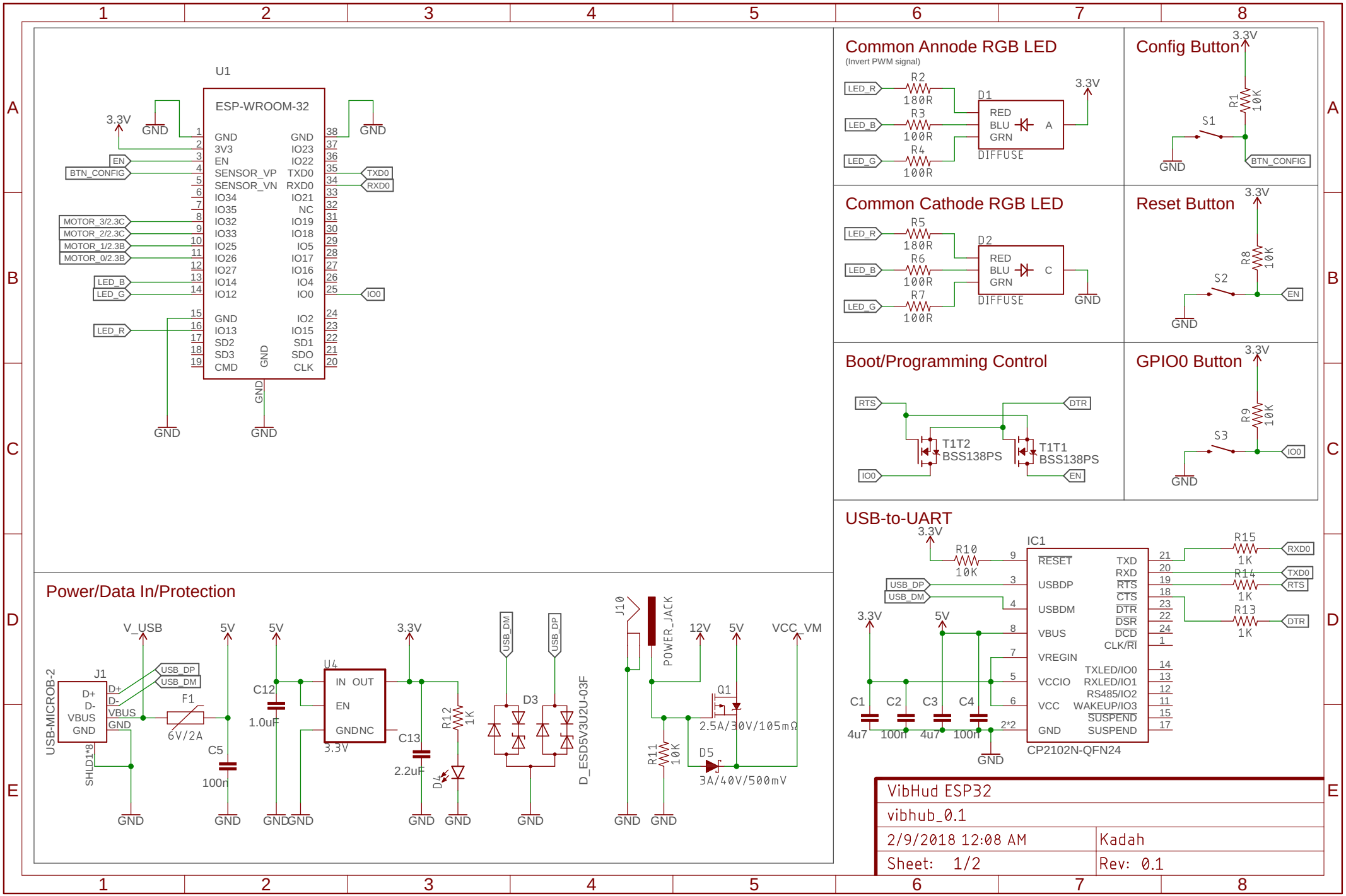
U1
ESP-WROOM-32
GND 3V3 EN SENSOR_VP SENSOR_VN IO34 IO35 IO32 IO33 IO25 IO26 IO27 IO14 IO12 GND IO13 SD2 SD3 CMD
GND IO23 IO22 TXD0 RXD0 IO21 NC IO19 IO18 IO5 IO17 IO16 IO4 IO0 IO2 IO15 SD1 SDO CLK
3.3V
GND
EN
BTN_CONFIG
MOTOR_3/2.3C
MOTOR_2/2.3C
MOTOR_1/2.3B
MOTOR_0/2.3B
LED_B
LED_G
LED_R
TXD0
RXD0
IO0
Common Annode RGB LED
(Invert PWM signal)
R2 180R
R3 100R
R4 100R
D1
RED
BLU
GRN
A
DIFFUSE
Common Cathode RGB LED
R5 180R
R6 100R
R7 100R
D2
C
Config Button
R1 10K
S1
Reset Button
R8 10K
S2
Boot/Programming Control
RTS
DTR
T1T2
BSS138PS
T1T1
BSS138PS
GPIO0 Button
R9 10K
S3
Power/Data In/Protection
V_USB
5V
3.3V
USB-MICROB-2
J1
D+
D-
VBUS
GND
SHLD1*8
USB_DP
USB_DM
F1
6V/2A
C5
100n
C12
1.0uF
U4
IN OUT
EN
GNDNC
C13
2.2uF
R12
1K
D4
D3
D_ESD5V3U2U-03F
J10
POWER_JACK
12V
Q1
2.5A/30V/105mΩ
R11
10K
D5
3A/40V/500mV
VCC_VM
USB-to-UART
IC1
R10 10K
RESET
USBDP
USBDM
VBUS
VREGIN
VCCIO
VCC
GND
TXD
RXD
RTS
CTS
DTR
DSR
DCD
CLK/RI
TXLED/IO0
RXLED/IO1
RS485/IO2
WAKEUP/IO3
SUSPEND
CP2102N-QFN24
R15 1K
R14 1K
R13 1K
C1 4u7
C2 100n
C3 4u7
C4 100n
2*2
VibHud ESP32
vibhub_0.1
2/9/2018 12:08 AM
Kadah
Sheet: 1/2
Rev: 0.1

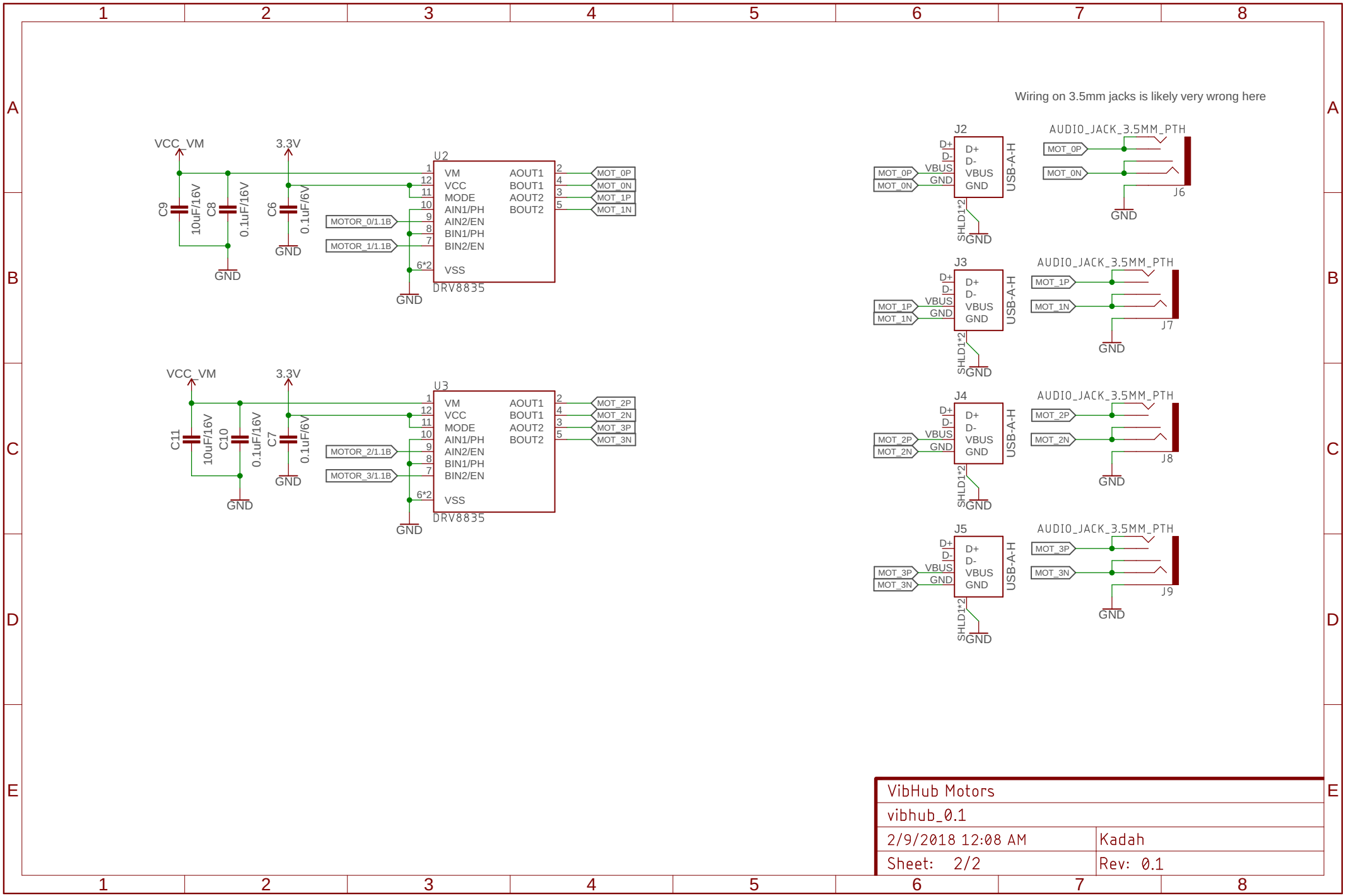

VibHub Motors	
vibhub_0.1	
2/9/2018 12:08 AM	Kadah
Sheet: 2/2	Rev: 0.1