Precision Agriculture

The ESP32 Autonomous Interface

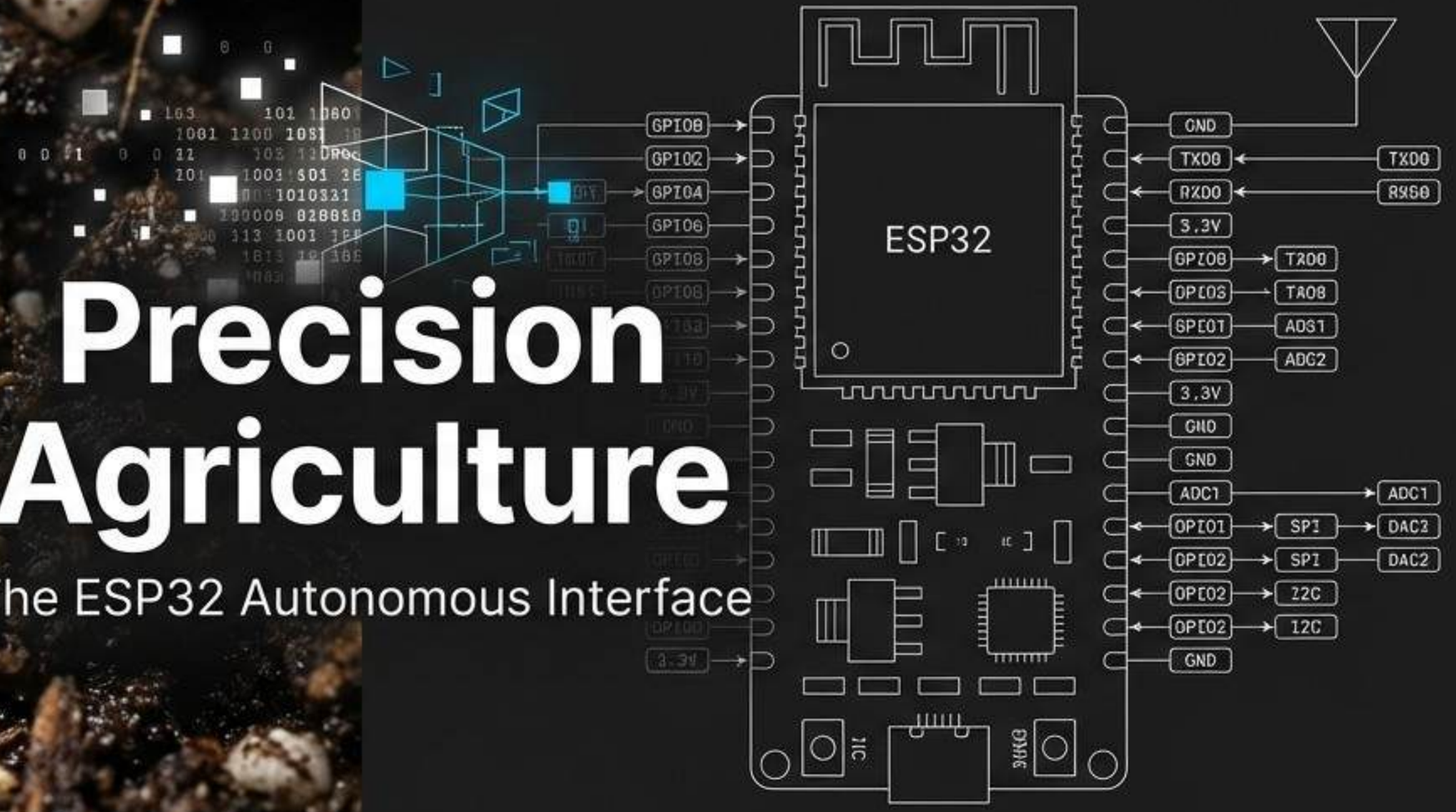

Bridging the gap between manual labor and embedded automation.

The High Cost of Manual Sowing

JetBrains Mono

```
// INEFFICIENCY: High labor & time cost
// INCONSISTENCY: Uneven placement = Wastage
// PHYSICAL TOLL: Human fatigue reduces yield
```

The Compact Architecture

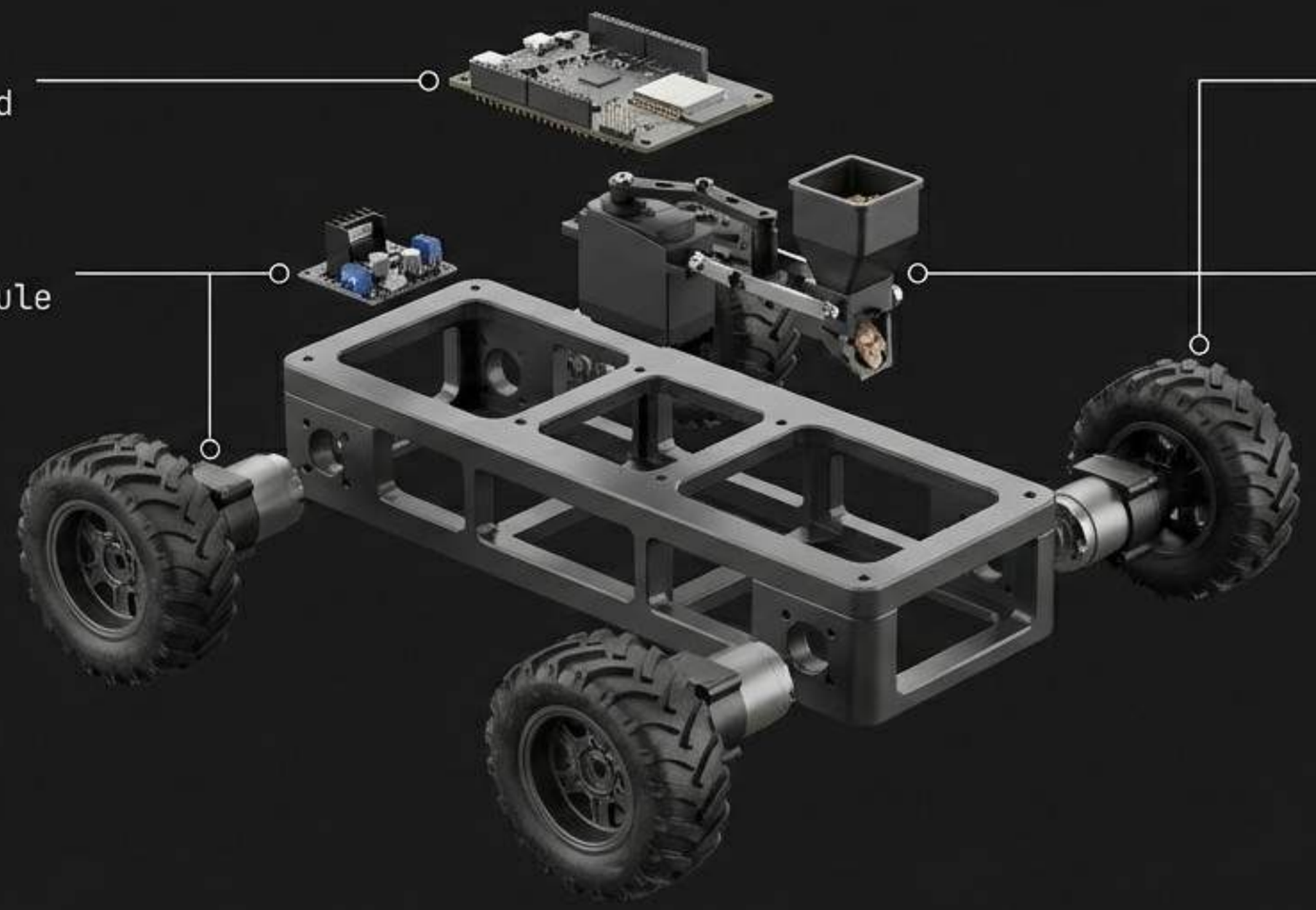

The ESP32 Control Hub

- **Central Controller:** Signals & Logic
- **Network Generator:** Standalone Hotspot
- **Identity:** Direct Device Connection

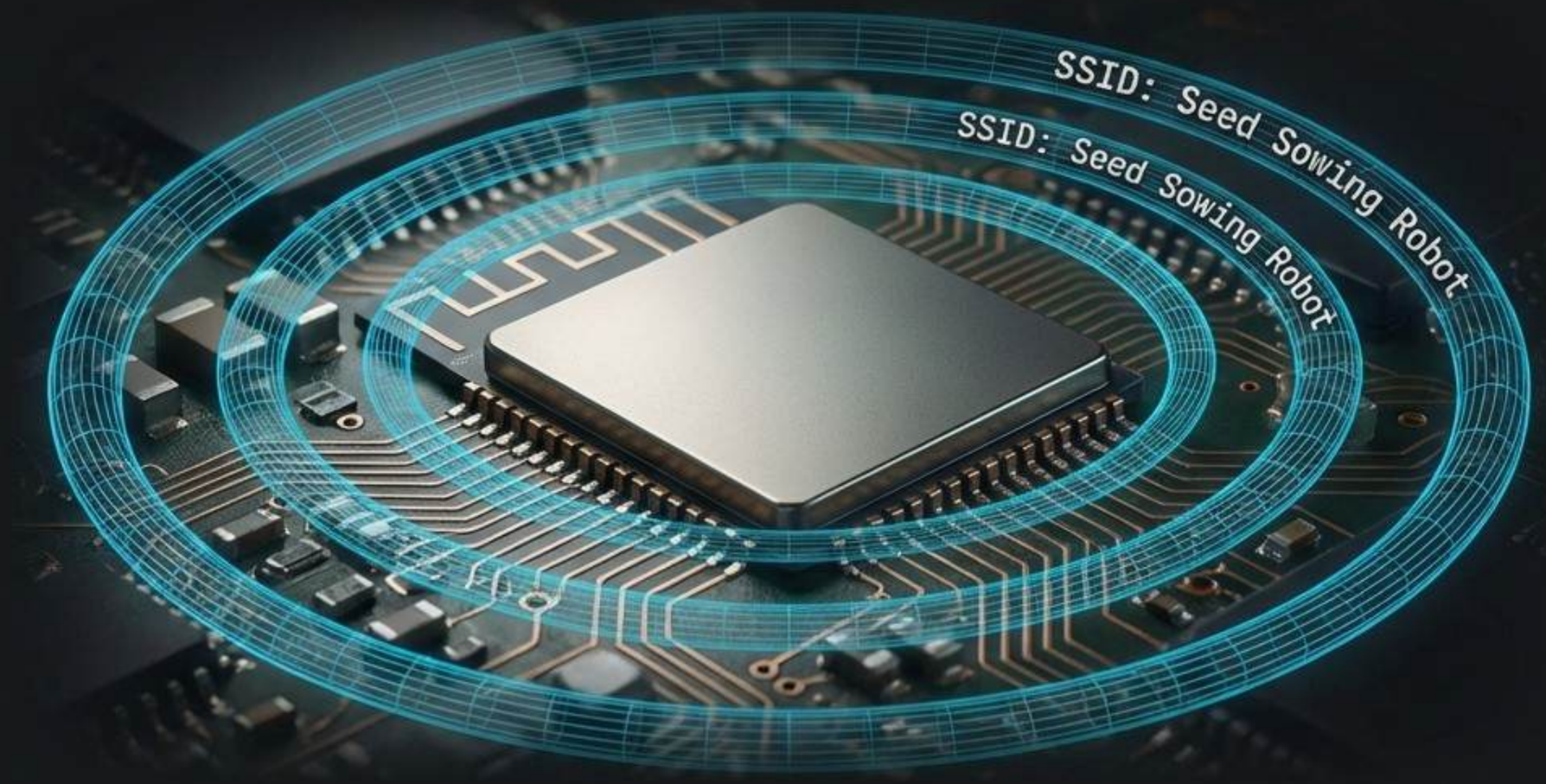

Locomotion & Power

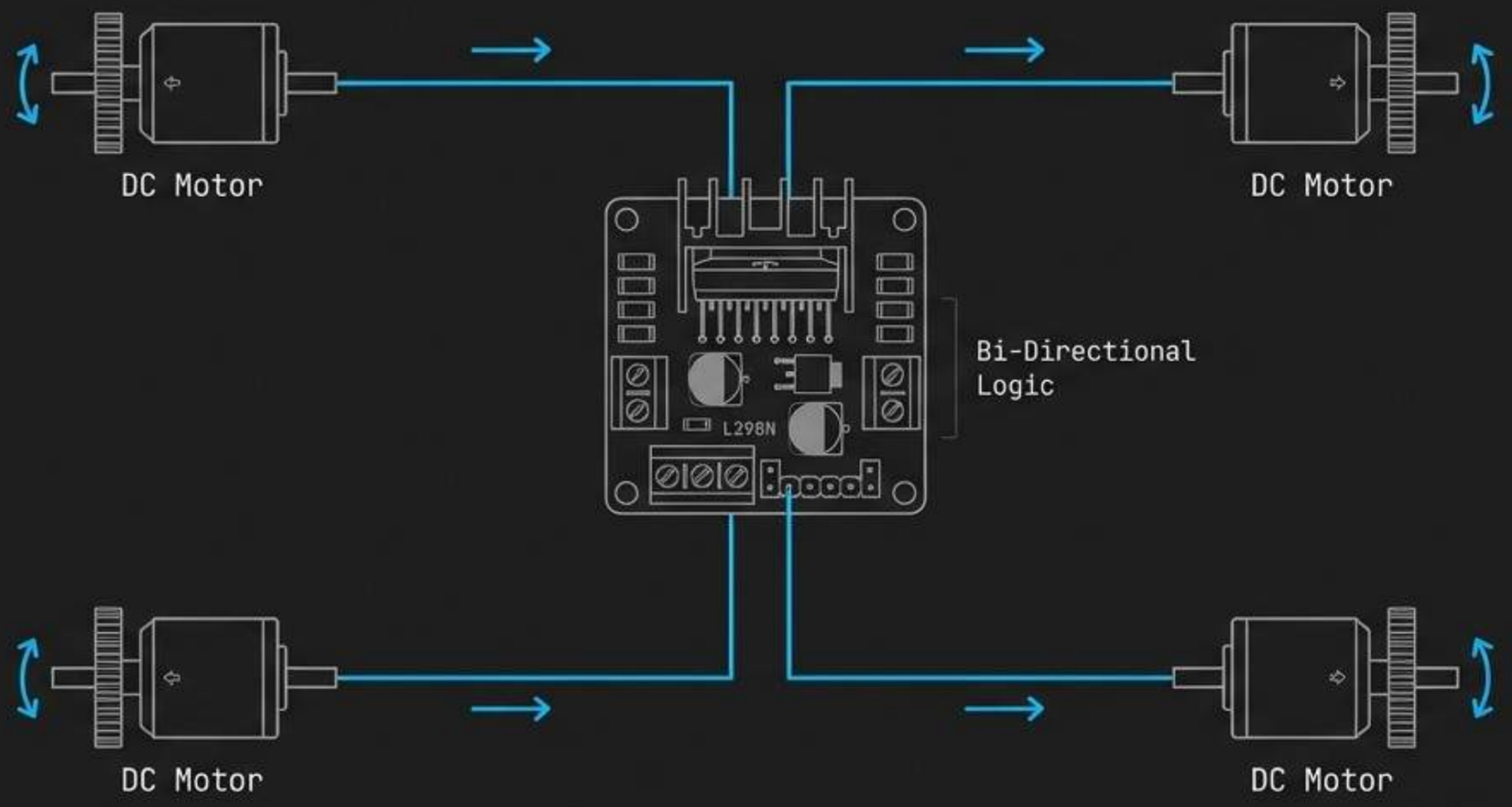

DRIVER:
L298N Dual H-Bridge

FUNCTION:
High Current Delivery

CONTROL:
Differential Steering
(Left/Right)

The PWM Actuation System

MECHANISM: Servo-operated flap **SIGNAL:** Pulse Width Modulation **ACTION:** Precision release

Autonomy from the Grid

LOCAL NETWORK:
Self-generated WiFi Hotspot

RANGE INDEPENDENCE:
No 4G/5G required

ENVIRONMENT:
Optimized for remote fields

The Web-Based Command Center

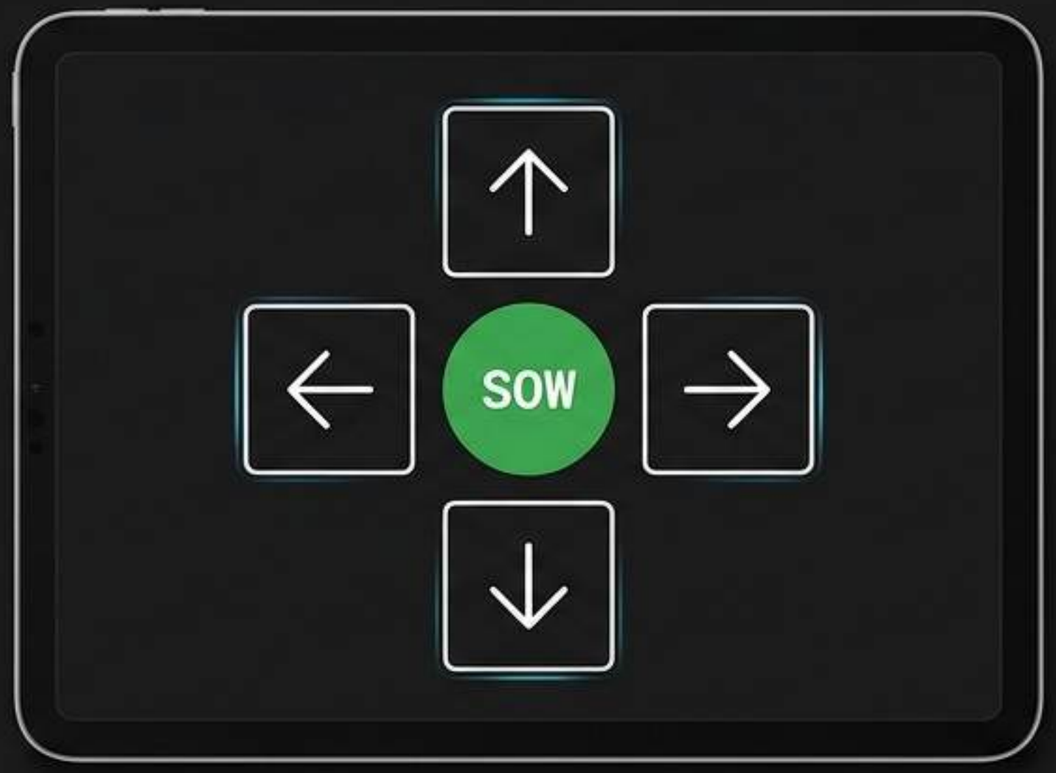

BROWSER BASED

LATENCY FREE

UNIVERSAL ACCESS

Multi-Crop Versatility

Adaptable outlet sizing for Wheat, Mustard, Millet, and Vegetables.

✅ **Uniform Growth & Higher Yield**

Roadmap to Smart Farming

From remote control to full autonomy.

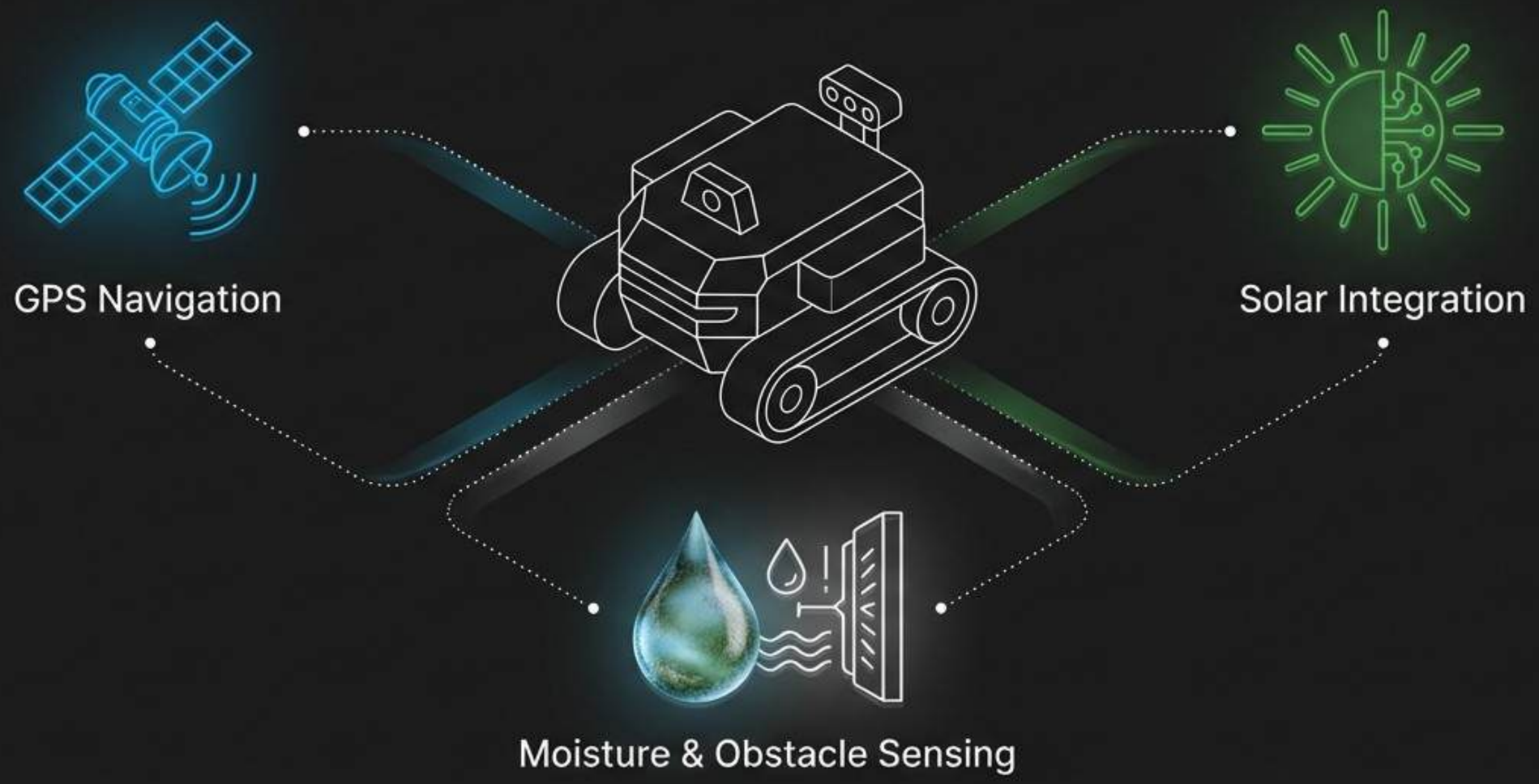

The Value Proposition

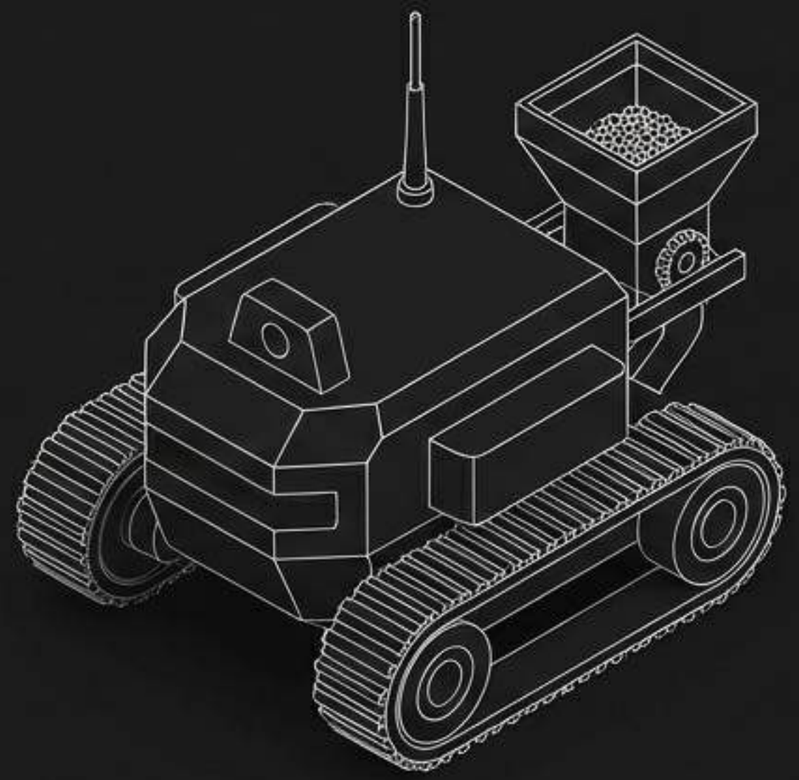

EFFICIENCY:
Reduces time & labor

PRECISION:
Zero wastage

ACCESSIBILITY:
Wireless & Cost-effective

A Foundation for Future Automation

"Modernizing agriculture through accessible, wireless robotics to increase productivity and reduce labor."

THE FUTURE IS AUTONOMOUS

Thank You

- Jash.